NAUTILUS HYOSUNG

PRINÉTA
1-800-951-9533
PRINETA.COM/ATMS

# Service Manual

## NH2600 System

**V01.00.00 (2013.06.13)**




© **Nautilus Hyosung, Inc.** All Rights Reserved.

# Revision History

## Service Manual – NH2600 System

| No. | Version | Date | Description of Change | Chapter |
|---|---|---|---|---|
| 1 | V01.00.00 | 2013/06/13 | New Publication | All |

© **Nautilus Hyosung** All Rights Reserved.
The content of this specification is protected by copyright laws.

2013. 6.13. 1st Release

# Contents


**Chapter1. Preface**

Purpose ..... 1-1
Audience ..... 1-1
Supported Information ..... 1-1
What is in This Manual ..... 1-1
Conventions ..... 1-2
Abbreviations of ATM ..... 1-2
Safety Precautions (English) ..... 1-4
Safety Precautions (French) ..... 1-6
Related Documents ..... 1-9
Overview ..... 1-10
Basic Features ..... 1-11

**Chapter2. System Configuration**

About the NH2600 ..... 2-1
Hardware Configuration ..... 2-4

**Chapter3. User Handling Unit**

Overview ..... 3-1
Operation Panel for Customer ..... 3-2
Encryption PIN Pad ..... 3-18

**Chapter4. Main Control Board**

Overview ..... 4-1
Basic Specification ..... 4-2
CPU Block Diagram ..... 4-3
Board Block Diagram ..... 4-4
Cortex-A8 M/B Layout ..... 4-5

**Chapter5. Power Supply**

Overview ..... 5-1
System Power On/Off ..... 5-2
Basic Specification ..... 5-3

**Chapter6. Cash Dispenser Unit**

Overview ..... 6-1
Disassembly & Reassembly ..... 6-4
Preventive Maintenance ..... 6-18
Parts Replacement ..... 6-22
Troubleshooting ..... 6-24
Optional Cash Dispenser Unit: CDU-M ..... 6-25

**Chapter7. Receipt Printer**

Overview ..... 7-1
Preventive Maintenance ..... 7-2
Part Replacement ..... 7-8



© **Nautilus Hyosung, Inc.** All Rights Reserved.

**Index .....Index-1**

**Memo .....Memo-1**


© **Nautilus Hyosung, Inc.** All Rights Reserved.

# Chapter 1
# Preface

## Contents

Purpose ..... 1-1
Audience ..... 1-1
Supported Information ..... 1-1
What is in This Manual ..... 1-1
Conventions ..... 1-2
Abbreviations of ATM ..... 1-2
Safety Precautions (English) ..... 1-4
Safety Precautions (French) ..... 1-6
Related Documents ..... 1-9
Overview ..... 1-10
Basic Features ..... 1-11


© **Nautilus Hyosung, Inc.** All Rights Reserved.

## Purpose

▶ This manual is produced to provide the NH2600 maintenance guide for field technician.

## Audience

▶ This manual is for persons related to maintain NH2600 in branches of banks, such as field technician and repair center engineer, to work efficiently and conveniently.

## Supported Information

▶ If any question or error occurs while maintaining NH2600 in compliance with this manual, please contact maintenance staffs of Nautilus Hyosung.
For the contact of maintenance staffs of Nautilus Hyosung, see the E-mail addresses and telephone numbers provided separately.

## What is in This Manual

▶ This manual is designed to provide the maintenance guide for the NH2600 and the detailed description of the following:
- Important Warnings
- Information for service & maintenance

▶ All measurements in this manual are in metric and [ ] is inch scale.

▶ All information described in this manual is a licensed product of Nautilus Hyosung, Inc.

Some of the information in this manual may differ according to the network processor to be connected and may be subsequently updated by the bank's needs or the improvement by Nautilus Hyosung, Inc.

It is the policy of Nautilus Hyosung, Inc to improve products as new technology, components, software, and firmware become available. Therefore Nautilus Hyosung, Inc. reserves the right to change specifications without notice.


© **Nautilus Hyosung, Inc.** All Rights Reserved.

# Conventions

▶ Terminologies

In this document the terminology listed below is used as follows:

- Customer and consumer refer to any person who transacts business through the ATM.
- Device and unit refer to the standard and optional ATM equipment, such as monitor, card reader, printer and dispenser.
- Fascia refers to the entire front portion of the unit, including the portion where the customer transacts business.
- Module refers to a plug-in device that can be serviced or replaced.
- Note(s) and bill(s) refer to the individual documents loaded into and dispensed from the dispenser.
- Servicing and maintenance refer to the supervisor, operator and technician's tasks performed to keep the ATM operational.
- Screen refers to the text appearing on the customer display.

# Abbreviations of ATM

▶ In this document the abbreviations listed below is used as follows:

| # | Abbreviations | Description |
|---|---|---|
| 1 | AD board | Analog to Digital conversion Board |
| 2 | ADA | The American Disabilities Act |
| 3 | AP | Application Program |
| 4 | Assy | Assembly |
| 5 | BATT S/W | Battery Switch |
| 6 | CAM | Camera Unit |
| 7 | CDU | Cash Dispenser Unit |
| 8 | CE | Control Electronics |
| 9 | Earphone Jack | Voice Converter for Visually Disabled Persons (ADA) |
| 10 | EMV | Europay, Mastercard, Visa |
| 11 | EP | Elementary Program |
| 12 | EPP | Encryption PIN Pad |
| 13 | H/W | Hardware |
| 14 | I/F | Interface |
| 15 | ISO | International Standard Organization |
| 16 | JPR | Journal Printer |
| 17 | LCD | Liquid Crystal Display |
| 18 | MCU | Magnetic Card Unit |


© **Nautilus Hyosung, Inc.** All Rights Reserved.

| # | Abbreviations | Description |
|---|---|---|
| 19 | OPL | Operation Panel for Customers to Operate |
| 20 | OSD board | On Screen Display Board |
| 21 | P/S | Power Supply |
| 22 | PIN | Personal Identification Number |
| 23 | PNC | Panel Control Board |
| 24 | PTR | Printer (mainly Receipt Printer) |
| 25 | S/W | Switch |
| 26 | SIU | Sensor and Indications Unit |
| 27 | SP | Service Provider |
| 28 | SPR | Slip Printer (Receipt Printer) |
| 29 | TTU | Text Terminal Unit (OPL or SPL) |
| 30 | VFD | Vacuum Fluorescent Display |


© **Nautilus Hyosung, Inc.** All Rights Reserved.

# Safety Precautions (English)

▶ Common Safety Precaution



Precautions outlined this manual provide information on safe and proper handling of the product. Non-compliance of the precautions may result in injury or damage to the product.
This precaution symbol with sample term tells you safety warnings during equipment handlings.

▶ Please read the following instructions before operating equipment.

- Operate equipment in the order outlined in this manual.
- Follow precautions indicated in this manual, as well as the equipment itself. Failure to properly address these precautions may lead to injury or damage to the product.
- Avoid operations not addressed in this manual.
- If you cannot remedy system problems using the methods outlined in this manual, please refer to contact information listed in the manual.
- Any change or modifications in construction of this device which are not expressly approved by the party responsible for compliance could void the user's authority to operate the equipment.

**<Note!>**
This equipment has been tested and found to comply with the limits for a Class A digital device, pursuant to part 15 of the FCC Rules. These limits are designed to provide reasonable protection against harmful interference when the equipment is operated in a commercial environment. This equipment generates, uses, and can radiate radio frequency energy and, if not installed and used in accordance with the instruction manual, may cause harmful interference to radio communications. Operation of this equipment in a residential area is likely to cause harmful interference in which case the user will be required to correct the interference at his own expense.

▶ Description of Precaution Symbols

| Symbol | Description |
|---|---|
|  | **Electrical Shock Warning**<br>▪ Do not remove cover. Only a maintenance engineer is allowed to open the cover.<br>▪ Do not touch. You may receive electric shock.<br>▪ Make sure to turn off the power when servicing the equipment. |
|  | **High Temperature Warning**<br>▪ Do not touch the equipment when it is running.<br>▪ The equipment can get extremely hot and may cause a burn.<br>▪ Make sure to close the cover before running the equipment. |


© **Nautilus Hyosung, Inc.** All Rights Reserved.

| | |
|---|---|
|  | **Use Precaution when Moving**<br>▪ The equipment is heavy. Make sure at least 2 people lift or move the equipment.<br>▪ Do not attempt to move the equipment alone. You may be injured from dropping the heavy equipment. |
|  | **Fire Hazard**<br>▪ Place the equipment in an area away from any combustible materials.<br>▪ The equipment may catch on fire from overheating or short circuit of the power supply unit. |
|  | **Disassembly Warnings**<br>▪ Do not disassemble or modify the equipment unless you are a certified engineer.<br>▪ Contact the service center for maintenance, adjustments and repairs.<br>▪ Improper disassembly may cause fire or electrical shock. |
|  | **Collapse Precautions**<br>▪ Do not place the equipment where the floor cannot sustain the weight of the equipment, or on slanted or unstable surface.<br>▪ Equipment may fall and cause injury or damage. |
|  | **Unplug the Equipment**<br>▪ Stop using the equipment immediately if it smokes, emits an unusual smell, makes abnormal sounds, or if liquids or other foreign materials enter the equipment.<br>▪ If the above-mentioned abnormalities occur, immediately turn off the power, unplug the equipment and contact the service center.<br>▪ If you ignore these symptoms, the equipment may catch on fire or cause electric shock. |

<CAUTION>

1. TO REDUCE THE RISK OF FIRE, USE ONLY No. 26 AWG OR LARGER TELECOMMUNICATION LINE CORD
2. RISK OF EXPLOSION IF BATTERY IS REPLACED BY AN INCORRECT TYPE. DISPOSED OF USED BATTERIES ACCORDING TO THE INSTRUCTIONS
3. FOR PLUGGABLE EQUIPMENT, THE SOCKET-OUTLET SHALL BE INSTALLED NEAR THE EQUIPMENT AN SHALL BE EASILY ACCESSIBLE
4. THE EQUIPMENT IS TO BE SECURED TO THE BUILDING STRUCTURE BEFORE OPERATION


© **Nautilus Hyosung, Inc.** All Rights Reserved.

# Précautions pour la sécurité (French)

► Précaution générale pour la sécurité



Précautions décrits de ce manuel fournissent des informations sur une manipulation sûre et appropriée du produit. Le non-respect des précautions peut causer des blessures ou endommager le produit.
Ce symbole de précaution avec le terme d'example vous indique des consignes de sécurité lors de la manipulation de l'équipement.

► Veuillez lire des instructions suivantes avant d'utiliser l'équipement

- Fonctionner l'équipement dans l'ordre indiqué dans ce manuel.
- Suivre les précautions indiquées dans ce manuel, ainsi que l'équipement lui-même. Le défaut de traiter correctement de ces précautions peut entraîner des blessures ou endommager le produit.
- Évitez des opérations non traitées dans ce manuel.
- Si vous ne pouvez pas résoudre des problèmes du système en utilisant des méthodes décrites dans ce manuel, veuillez se référer aux informations de contact figurant dans le manuel, s'il vous plaît.
- Certain changement ou des modifications dans la construction de ce dispositif qui ne sont pas expressément approuvés par la partie responsable de la conformité pourraient annuler l'autorité de l'utilisateur de faire fonctionner l'équipement.

**<REMAQUE!>**

Cet équipement a été testé et fondé pour se conformer aux limites pour un équipement numérique de classe A, conformément à la partie 15 des règles FCC. Ces limites sont conçues pour fournir une protection raisonnable contre des interférences nuisibles lorsque l'équipement est utilisé dans un environnement commercial. Cet équipement génère, utilise et peut émettre des fréquences radios et, s'il n'est pas installé et utilisé conformément aux instructions de ce manuel, peut causer des interférences nuisibles aux communications radios.
Le fonctionnement de cet équipement dans une zone résidentielle est susceptible de provoquer des interférences nuisibles dans le cas, l'utilisateur devra corriger ces interférences à ses propres frais.

► Description des symboles de précaution

| Symbole | Description |
|---|---|
|  | **Choc électrique**<br>• Ne pas retirer le couvercle. Seul le technicien d'entretien est autorisé à ouvrir le couvercle.<br>• Ne pas toucher. Vous pouvez avoir un choc électrique.<br>• Assurez-vous d'éteindre l'appareil lors de l'entretien de l'équipement. |


© **Nautilus Hyosung, Inc.** All Rights Reserved.

| | |
|---|---|
|  | **À haute temperature**<br>• Ne pas toucher l'équipement quand il est en marche.<br>• L'équipement peut devenir extrêmement chaud et peut provoquer une brûlure.<br>• Assurez-vous de fermer le couvercle avant de lancer l'équipement. |
|  | **Soyez prudent lors du déplacement**<br>• L'équipement est lourd. Assurez-vous d'au moins 2 personnes pour soulever ou déplacer l'équipement<br>• N'essayez pas de déplacer l'équipement seul. Vous pouvez être blessés par la chute de l'équipement lourd. |
|  | **Risque d'incendie**<br>• Placer l'équipement dans une zone éloignée de tous les matériaux combustibles.<br>• L'équipement peut s'enflammer de surchauffe ou de court-circuit de l'unité d'alimentation. |
|  | **Démontage**<br>• Ne pas démonter ou de modifier l'équipement, sauf si vous êtes ingénieur certifié.<br>• Contacter le centre de service pour l'entretien, le réglage et la réparation.<br>• Le mauvais démontage peut provoquer un incendie ou un choc électrique. |
|  | **Tomber**<br>• Ne pas placer l'équipement dont le sol ne peut pas supporter le poids de l'équipement, ou sur une surface inclinée ou instable.<br>• L'équipement peut tomber et provoquer des blessures ou des dommages. |
|  | **Débrancher l'équipement**<br>• Cessez d'utiliser l'équipement immédiatement si il fume, émet une odeur inhabituelle, fait des bruits anormaux ou si des liquides ou d'autres matériaux étrangers dans l'équipement.<br>• Si les anomalies mentionnées ci-dessus se produisent, éteignez immédiatement la puissance, débranchez l'appareil et contactez le centre de service.<br>• Si vous ignorez ces symptômes, l'équipement peut prendre feu ou provoquer un choc électrique. |

**AVERTISSEMENT :**

1. POUR RÉDUIRE LES RISQUES D'INCENDIE, UTILISEZ UNIQUEMENT AWG n ° 26 OU LA LIGNES DE TELECOMMUNICATION PLUS GROSSE
2. RISQUE D'EXPLOSION SI LA BATTERIE EST REMPLACEE PAR UN TYPE INCORRECT. DISPOSER POUR UTILISATION DES BATTRIES SELON LES INSTRUCTIONS
3. POUR LES APPAREILS RACCORDES, LA PRISE DOIT ETRE INSTALLEE PRES D'EQUIPEMENT POUR ÊTRE FACILEMENT ACCESSIBLE


© **Nautilus Hyosung, Inc.** All Rights Reserved.

4. L’EQUIPEMENT DOIT ETRE SECURISE A LA STRUCTURE DU BATIMENT AVANT D'UTILISER


© **Nautilus Hyosung, Inc.** All Rights Reserved.

## Related Documents

▶ The related documents are listed as follows. If needed, please contact staffs of our technical support team and maintenance team.

- Operator Manual
- Installation Manual


© **Nautilus Hyosung, Inc.** All Rights Reserved.

# Overview

► This manual is designed to provide maintenance guide for the NH2600 ATM and provide detailed description of the following:

- System configuration
- Specification of each unit
- Facility specifications

All information described in this manual is a licensed product of Nautilus Hyosung. It is the policy of Nautilus Hyosung to improve products as new technology, components, software, and firmware become available. Therefore Nautilus Hyosung reserves the right to change specifications without notice.


© **Nautilus Hyosung, Inc.** All Rights Reserved.

# Basic Features

▶ Major features of NH2600 are highlighted in the following list:

| | | | |
|---|---|---|---|
| **Main Controller** | | | |
| CPU | | S5PC100 834MHz (ARMCortex-A8) | |
| Memory | SDRAM | 256MB | |
| | Flash Memory | 256MB | |
| Operating System | | WinCE 6.0 | |
| Serial Ports | | 8 Ports | |
| Communication | | MODEM & TCP/IP Selectable | |
| **Customer Display** | | | |
| Display Type | | 10.1” TFT Color LCD | 1024 X 600 |
| Flicker | | EPP Lighting LED Array, MCU Flicker | |
| **Customer Input Method** | | | |
| PIN Pad | | Plastic Key Cap EPP | T-DES, PCI, RKT (Metal Key Cap) |
| Function Key | | 4X2 | NDC Compatible |
| **Cash Dispenser** | | | |
| Number of cassettes | | 1 cassette | 2cassette Option |
| Denomination | | US Dollar | |
| Maximum Dispense | | 40 Notes/Transaction | |
| Cassette Capacity | | 1,000Notes / Capacity | US Dollar Brand New 2K, 4K Option |
| Reject Type | | Note by Note Reject (200 bills Max) | Reject Bin |
| **Card Reader** | | | |
| Type | | DIP Type | EMV option |
| **Receipt Printer** | | | |
| Printing Type | | 3” Thermal Line Printing | |
| Paper Setting Method | | Semi-Automatic | |
| Paper Specification | Type | Thermal Roll Paper | |
| | Width | Max. 80mm [3.15inch] | |
| | Outer Diameter | Max. 180Φ | |
| **Journal Printer** | | | |
| Journal Printer | | Electronic Journal | |
| **Safety** | | | |
| Safety | | UL Business-Hour Safety | - |


© **Nautilus Hyosung, Inc.** All Rights Reserved.

| | | |
|---|---|---|
| Locking device | Dial Lock | Combo/Cencon Lock Option |
| **Additional Function** | | |
| Audio guidance | Support | Speaker |
| ADA Audio guidance | Support | |

**<Note!>**

Your NH2600 may not contain all the devices described in this section. Some devices are optional and some devices cannot be used in combination with other devices (mutually exclusive combinations).


© **Nautilus Hyosung, Inc.** All Rights Reserved.

NAUTILUS HYOSUNG

# Chapter 2
# System Configuration

## Contents

About the NH2600 ..... 2-1
The Exterior Overview ..... 2-2
The Interior Overview ..... 2-3
Hardware Configuration ..... 2-4


© **Nautilus Hyosung, Inc.** All Rights Reserved.

# About the NH2600

► Newly designed ATM - The NH2600's totally unique design enhances your customers' ATM experience. Unlike any other retail ATM, the sleek look and halo-like LED lights will attract more users and drive additional transactions thus delivering more revenue to your bottom line.

► Convenience everyone can enjoy - The NH2600 provides unsurpassed convenience to all users with its intuitive user interface presented on a vivid 10.1" color LCD screen, multi color LED indicator for the pin pad and Braille for visually impaired users. The NH2600 combines the best of Nautilus Hyosung's innovative design and engineering capabilities to ensure the speed and convenience your customers will love.

► Maximum Reliability - Leveraging our extensive experience in the Retail ATM industry, Nautilus Hyosung continues its industry-leading reputation for reliability and ease of service. The NH2600 incorporates proven cash dispensing technology widely regarded as the best in the industry. Ease of maintenance and simplified service also ensure maximum availability and uptime with minimal operational intervention.

► Green Technology - With leadership also comes responsibility. The NH2600 is equipped with energy saving features long lasting ATM parts designed to minimize environmental impact. Users can also be presented the choice of no receipt or to display an encoded digital receipt on the screen to minimize paper use.


© **Nautilus Hyosung, Inc.** All Rights Reserved.

## The Exterior Overview

► The following picture shows the front of NH2600 and key units.

The fascia provides the interface between the customer and NH2600.
The customer selects transactions and requests information at the fascia.

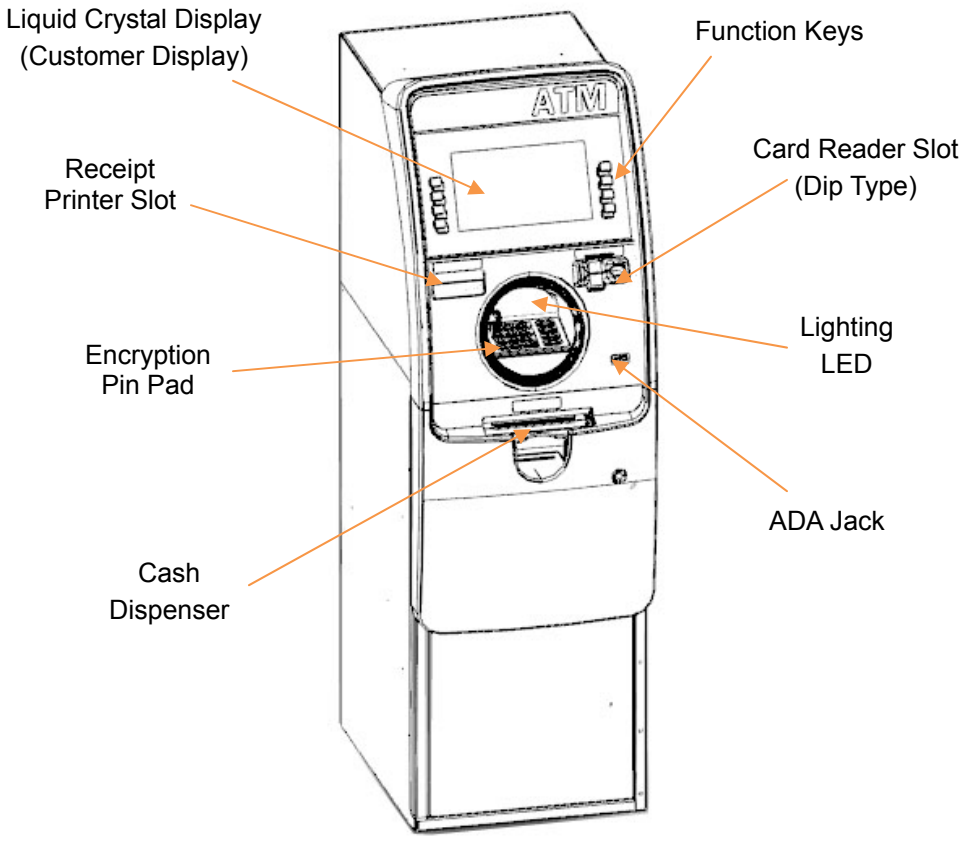



© **Nautilus Hyosung, Inc.** All Rights Reserved.

## The Interior Overview

► The interior and key units of NH2600 are as follows.

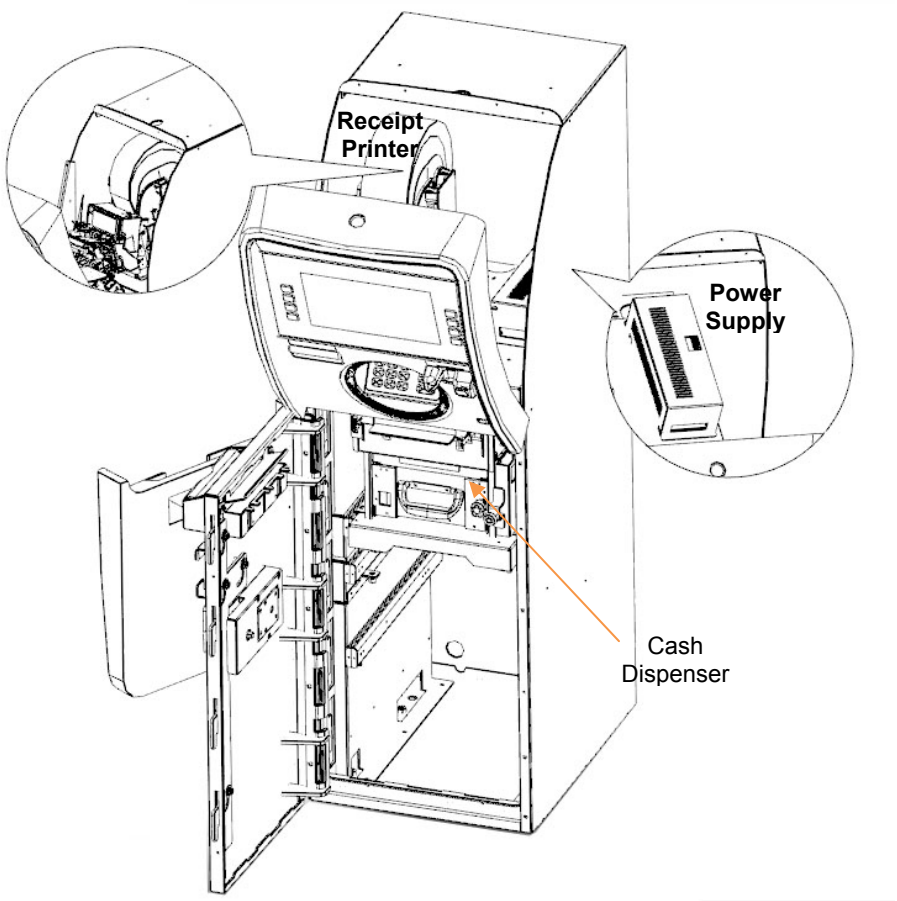



© **Nautilus Hyosung, Inc.** All Rights Reserved.

## Hardware Configuration

► System Block Diagram

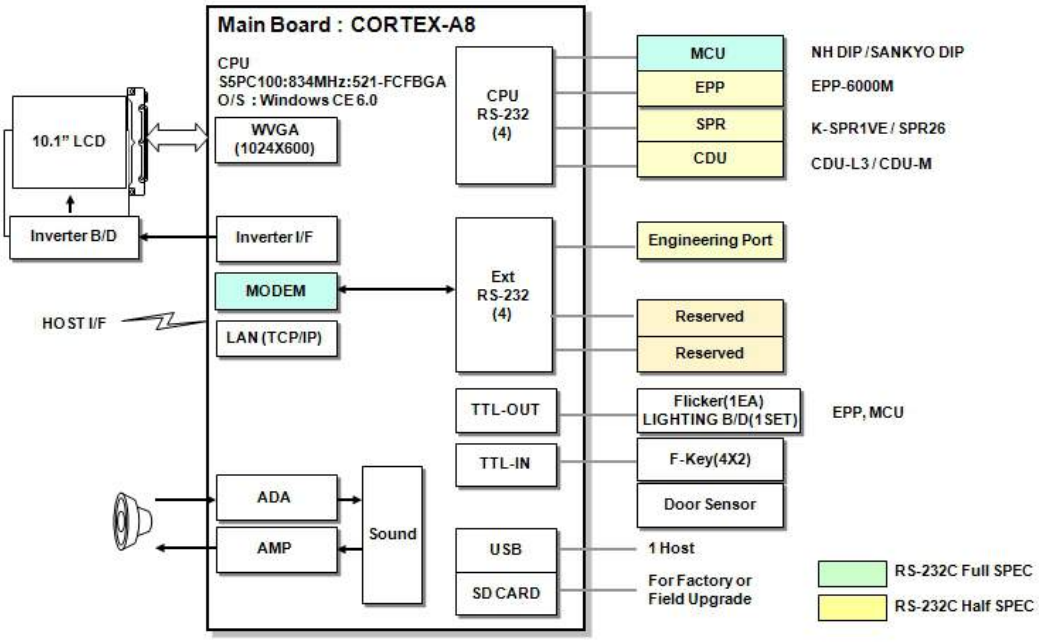



© **Nautilus Hyosung, Inc.** All Rights Reserved.

NAUTILUS HYOSUNG

Chapter 3

# User Handling Unit

## Contents


Overview ..... 3-1
Basic Specification ..... 3-1
Operation Panel for Customer ..... 3-2
LCD ..... 3-2
Modem Board ..... 3-16
Encryption PIN Pad ..... 3-18



© **Nautilus Hyosung, Inc.** All Rights Reserved.

# Overview

▶ The user handling unit is composed of function key and an encryption PIN pad that the customers use to complete a transaction. It also includes a monitor and associated electronic boards.

## Basic Specification

▶ Basic Specification

| | | | |
|---|---|---|---|
| Customer Display | Type | 10.1 inch TFT color LCD | |
| | Resolution | 1024 * 600 | |
| | Function Key | 4 X 2 | NDC |
| Guide Light | Flicker | EPP Lighting Led Array, MCU Flicker | |
| PIN-Pad | | Plastic Key Cap EPP | T-DES, PCI, RKT (Metal Key Cap) |


© **Nautilus Hyosung, Inc.** All Rights Reserved.

# Operation Panel for Customer

► The operation panel includes a LCD, function key and associated electronic boards.

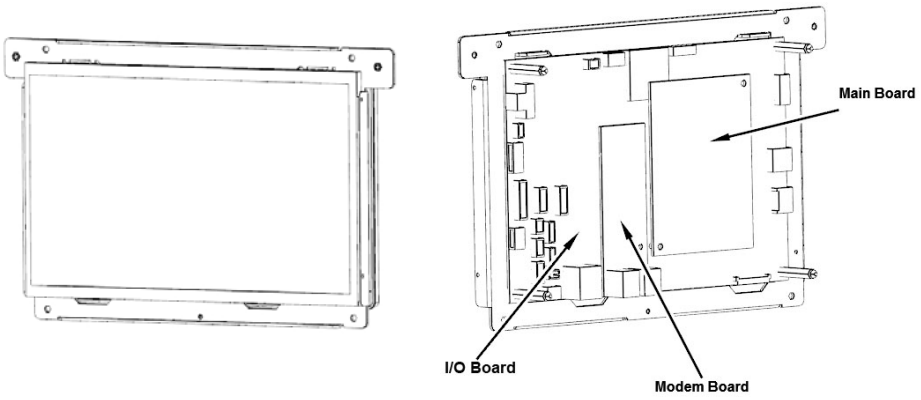


## LCD

► This is a 10.1” (10.06” diagonal) TFT Liquid Crystal Display module with LED Backlight unit and 40 pins LVDS interface. This module supports 1024 x 600 Wide-SVGA mode and can display 262,144 colors. The optimum viewing angle is at 6 o’clock direction.

### Precautions

► Handling Precautions

1. The module should be assembled into the system firmly by using every mounting hole. Be careful not to twist or bend the module.
2. While assembling or installing modules, it can only be in the clean area. The dust and oil may cause electrical short or damage the polarizer.
3. Use fingerstalls or soft gloves in order to keep display clean during the incoming inspection and assembly process.
4. Do not press or scratch the surface harder than a HB pencil lead on the panel because the polarizer is very soft and easily scratched.
5. If the surface of the polarizer is dirty, please clean it by some absorbent cotton or soft cloth. Do not use Ketone type materials (ex. Acetone), Ethyl alcohol, Toluene, Ethyl acid or Methyl chloride. It might permanently damage the polarizer due to chemical reaction.
6. Wipe off water droplets or oil immediately. Staining and discoloration may occur if they left on panel for a long time.
7. If the liquid crystal material leaks from the panel, it should be kept away from the


**Nautilus Hyosung, Inc.** All Rights Reserved.

eyes or mouth. In case of contacting with hands, legs or clothes, it must be washed away thoroughly with soap.

8. Protect the module from static electricity, it may cause damage to the C-MOS Gate Array IC.
9. Do not disassemble the module.
10. Do not pull or fold the LED wire.
11. Pins of I/F connector should not be touched directly with bare hands.

► Storage Precautions

1. High temperature or humidity may reduce the performance of module. Please store LCD module within the specified storage conditions.
2. It is dangerous that moisture come into or contacted the LCD module, because the moisture may damage LCD module when it is operating.
3. It may reduce the display quality if the ambient temperature is lower than 10 ºC. For example, the response time will become slowly, and the starting voltage of LED will be higher than the room temperature.

► Operation Precautions

1. Do not pull the I/F connector in or out while the module is operating.
2. Always follow the correct power on/off sequence when LCD module is connecting and operating. This can prevent the CMOS LSI chips from damage during latch-up.
3. The startup voltage of Backlight is approximately 1000 Volts. It may cause electrical shock while assembling with converter. Do not disassemble the module or insert anything into the Backlight unit.


© **Nautilus Hyosung, Inc.** All Rights Reserved.

## General Specifications

► General Specifications

| Item | Specification |
|---|---|
| Screen Size | 10.06” diagonal |
| Driver Element | a-si TFT active matrix |
| Pixel Number | 1024 x R.G.B. x 600 pixel |
| Pixel Pitch | 0.2175 (H) x 0.2088 (V)mm |
| Pixel Arrangement | RGB vertical stripe |
| Display Colors | 262,144 color |
| Transmissive Mode | Normally white |
| Surface Treatment | Hard coating (3H), Anti-Glare |
| Luminance/ White | 200Cd/m2 |
| Power Consumption | Total 2.169 W (Max.) @ cell 0.561 W (Max.), BL 1.608 W (Max.) (1) |

**<Note!>**

1. The specified power consumption (with converter efficiency) is under the conditions at VCCS = 3.3 V, fv = 60 Hz, LED_VCCS = Typ, fPWM = 200 Hz, Duty=100% and Ta = 25 ± 2 ºC, whereas mosaic pattern is displayed.


**Nautilus Hyosung, Inc.** All Rights Reserved.

## Electrical Absolute Ratings

► TFT LCD Module

| Item | Symbol | Value | | Unit |
|---|---|---|---|---|
| | | Min. | Max. | |
| Power Supply Voltage | VCCS | -0.3 | +4.0 | V |
| Logic Input Voltage | $V_{IN}$ | -0.3 | VCCS+ 0.3 | V |
| Converter Input Voltage | LED_VCCS | -0.3 | 25 | V |
| Converter Control Signal Voltage | LED_PWM | -0.3 | 5.5 | V |
| Converter Control Signal Voltage | LED_EN | -0.3 | 5.5 | V |

**<Note!>**

1. Stresses beyond those listed in above “ELECTRICAL ABSOLUTE RATINGS” may cause permanent damage to the device. Normal operation should be restricted to the conditions described in “ELECTRICAL CHARACTERISTICS”.

## Electrical Specifications

► Functional Block Diagram

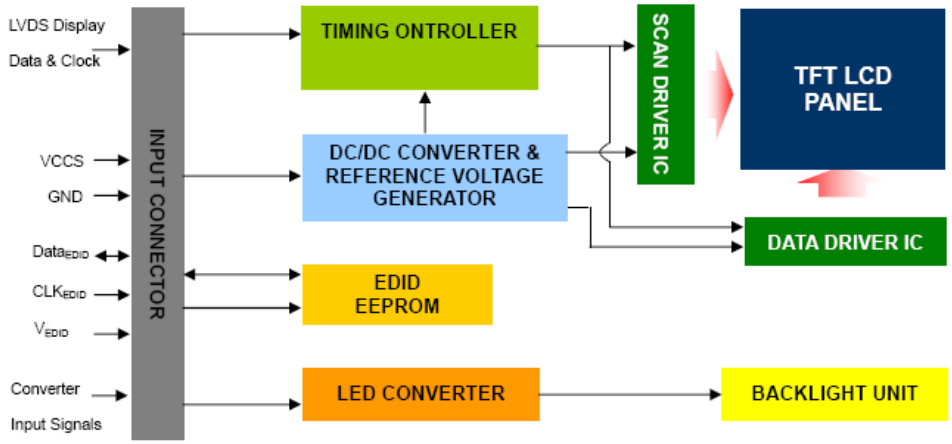


► Interface Connections – PIN Assignment

| Pin | Symbol | Description | Remark |
|---|---|---|---|
| 1 | NC | No Connection (Reserve) | |
| 2 | VCCS | Power Supply (3.3V typ.) | |
| 3 | VCCS | Power Supply (3.3V typ.) | |
| 4 | VEDID | DDC 3.3V power | |
| 5 | NC | No Connection (Reserved for CMI test) | |


© **Nautilus Hyosung, Inc.** All Rights Reserved.

| | | | |
|---|---|---|---|
| 6 | CLKEDID | DDC clock | |
| 7 | DATAEDID | DDC data | |
| 8 | Rxin0- | LVDS differential data input | R0-R5, G0 |
| 9 | Rxin0+ | LVDS differential data input | |
| 10 | VSS | Ground | |
| 11 | Rxin1- | LVDS differential data input | G1~G5, B0, B1 |
| 12 | Rxin1+ | LVDS differential data input | |
| 13 | VSS | Ground | |
| 14 | Rxin2- | LVDS Differential Data Input | B2-B5,HS,VS, DE |
| 15 | Rxin2+ | LVDS Differential Data Input | |
| 16 | VSS | Ground | |
| 17 | RxCLK- | LVDS differential clock input | LVDS CLK |
| 18 | RxCLK+ | LVDS differential clock input | |
| 19 | VSS | Ground | |
| 20 | NC | No Connection (Reserve) | |
| 21 | NC | No Connection (Reserve) | |
| 22 | VSS | Ground | |
| 23 | NC | No Connection (Reserve) | |
| 24 | NC | No Connection (Reserve) | |
| 25 | VSS | Ground | |
| 26<br>NC | No Connection<br>(Reserve) | | |
| 27 | NC | No Connection (Reserve) | |
| 28 | VSS | Ground | |
| 29 | NC | No Connection (Reserve) | |
| 30 | NC | No Connection (Reserve) | |
| 31 | LED_GND | LED Ground | |
| 32 | LED_GND | LED Ground | |
| 33 | LED_GND | LED Ground | |
| 34 | NC | No Connection (Reserve) | |
| 35 | LED_PWM | PWM Control Signal of LED Converter | |
| 36 | LED_EN | Enable Control Signal of LED Converter | |
| 37 | NC | No Connection (Reserve) | |
| 38 | LED_VCCS | LED Power Supply | |
| 39 | LED_VCCS | LED Power Supply | |
| 40 | LED_VCCS | LED Power Supply | |

**<Note!>** The first pixel is odd as shown in the following figure.

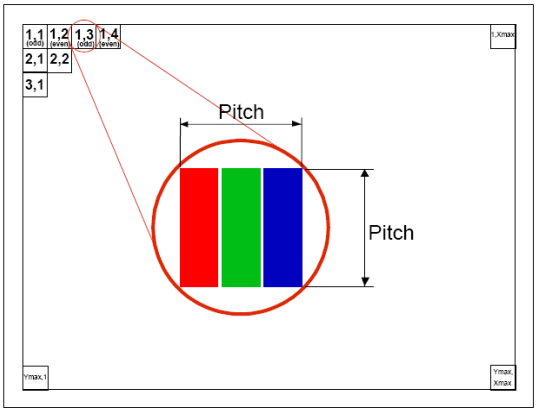



**Nautilus Hyosung, Inc.** All Rights Reserved.

► Electrical Characteristics

1. LCD Electronics Specification

| Parameter | Symbol | Value | | | Unit | Note |
|---|---|---|---|---|---|---|
| | | Min. | Typ. | Max. | | |
| Power Supply Voltage | VCCS | 3.0 | 3.3 | 3.6 | V | - |
| Ripple Voltage | $V_{RP}$ | - | 50 | - | mV | - |
| Inrush Current | $I_{RUSH}$ | - | - | 1.5 | A | (2) |
| Power Supply Current | Mosaic | - | 150 | 170 | mA | (3)a |
| | Black | - | 160 | 180 | mA | (3)b |

**<Note!>**

1) The ambient temperature is Ta = 25 ± 2 ºC.

2) IRUSH: the maximum current when VCCS is rising
IIS: the maximum current of the first 100ms after power-on
Measurement Conditions: Shown as the following figure. Test pattern: black.

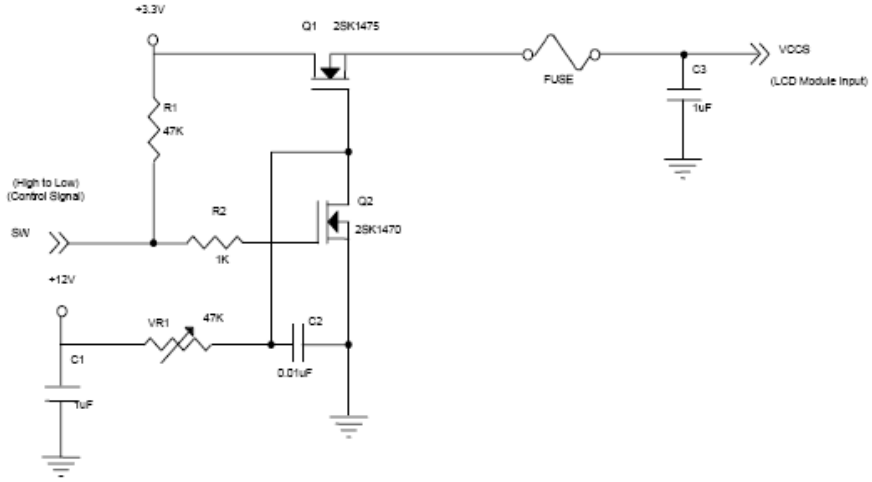


**VCCS rising time is 0.5ms**

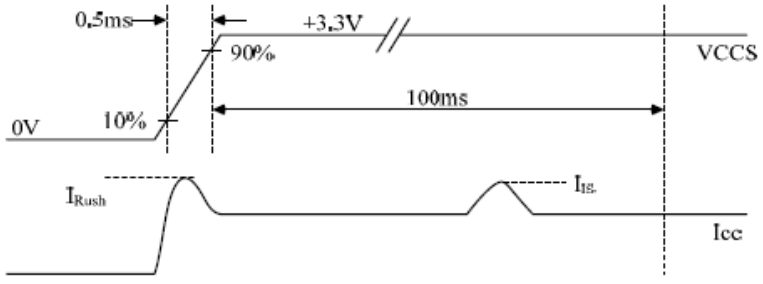


3) The specified power supply current is under the conditions at VCCS = 3.3 V, Ta = 25 ± 2 ºC, DC Current and fv = 60 Hz, whereas a power dissipation check pattern below is displayed.


© **Nautilus Hyosung, Inc.** All Rights Reserved.

a. Mosaic Pattern

<Active Area>

b. Black Pattern

<Active Area>

2. LED Converter Specification

| Parameter | | Symbol | Value | | | Unit | Note |
|---|---|---|---|---|---|---|---|
| | | | Min. | Typ. | Max. | | |
| Converter Input power supply voltage | | LED_Vccs | 5.0 | 12.0 | 21.0 | V | |
| Converter Inrush Current | | $I_{LED_{RUSH}}$ | - | - | 1.5 | A | (1) |
| EN Control Level | Backlight On | | 2.3 | - | 5 | V | |
| | Backlight Off | | 0 | - | 0.8 | V | |
| PWM Control Level | PWM High Level | | 2.3 | - | 5 | V | |
| | PWM Low Level | | 0 | - | 0.15 | V | |
| PWM Control Duty Ratio | | | 10 | - | 100 | % | |
| | | | 5 | - | 100 | % | (2) |
| PWM Control Permissive Ripple Voltage | | $V_{PWM_pp}$ | - | - | 100 | mV | |
| PWM Control Frequency | | $f_{PWM}$ | 190 | - | 2K | Hz | (3) |
| LED Power Current | LED_VCCS =Typ. | ILED | 92 | 113 | 134 | mA | (4) |

**<Note!>**

1) $I_{LED_{RUSH}}$: the maximum current when LED_VCCS is rising, $I_{LED_{IS}}$: the maximum current of the first 100ms after power-on, Measurement Conditions: Shown as the following figure. LED_VCCS = Typ, Ta = 25 ± 2 ºC, $f_{PWM}$ = 200 Hz, Duty=100%.


**Nautilus Hyosung, Inc.** All Rights Reserved.

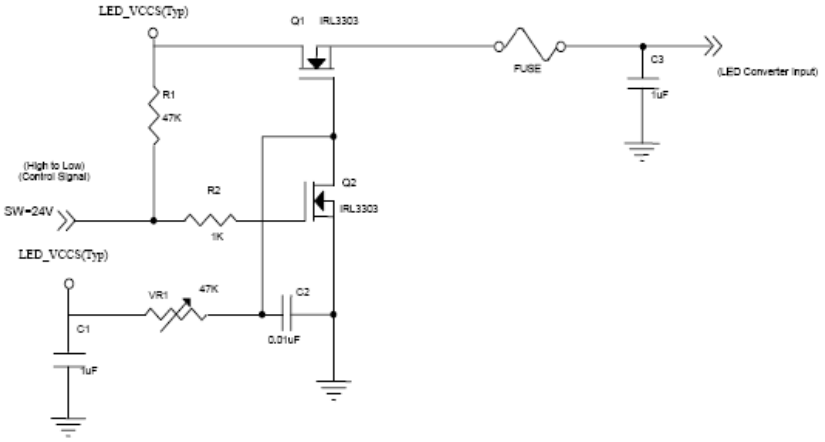


**VLED rising time is 0.5ms**

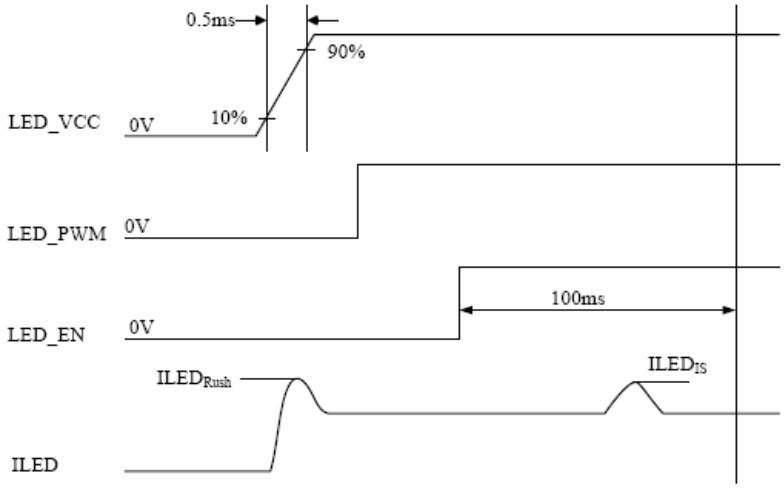


2) If the PWM control duty ratio is less than 10%, there is some possibility that acoustic noise or backlight flash can be found. And it is also difficult to control the brightness linearity.
3) If PWM control frequency is applied in the range less than 1KHz, the “waterfall” phenomenon on the screen may be found. To avoid the issue, it’s a suggestion that PWM control frequency should follow the criterion as below.

PWM control frequency $f_{PWM}$ should be in the range

$$(N + 0.33) * f \leq f_{PWM} \leq (N + 0.66) * f$$

$N$ : Integer ($N \geq 3$)

$f$ : Frame rate

4) The specified LED power supply current is under the conditions at “LED_VCCS = Typ.”, Ta = 25± 2 ºC, $f_{PWM}$ = 200 Hz, Duty=100%.


© **Nautilus Hyosung, Inc.** All Rights Reserved.

3. Backlight Unit

| Parameter | Symbol | Value | | | Unit | Note |
|---|---|---|---|---|---|---|
| | | Min. | Typl | Max. | | |
| LED Light Bar Power Supply Voltage | $V_L$ | 25.2 | 27.9 | 30.6 | V | |
| LED Light Bar Power Supply Current | $I_L$ | 38 | 40 | 42 | mA | |
| Power Consumption | $P_L$ | 0.96 | 1.12 | 1.29 | W | |
| LED Life Time | $L_{BL}$ | 15000 | - | - | Hrs | |

**<Note!>**

1) LED current is measured by utilizing a high frequency current meter as shown below :

2) For better LED light bar driving quality, it is recommended to utilize the adaptive boost converter with current balancing function to drive LED light-bar.
3) $P_L = I_L \times V_L$ (Without LED converter transfer efficiency)
4) The lifetime of LED is defined as the time when it continues to operate under the conditions at Ta = 25 ±2°C and $I_L$ = 20 mA(Per EA) until the brightness becomes 50% of its $\leqq$ s original value.


**Nautilus Hyosung, Inc.** All Rights Reserved.

► LVDS Input Signal Timing Specifications

1. LVDS DC Specifications

| Parameter | Symbol | Value | | | Unit | Note |
|---|---|---|---|---|---|---|
| | | Min. | Typ. | Max. | | |
| LVDS Differential Input High Threshold | $V_{TH(LVDS)}$ | - | - | +100 | mV | (1) $V_{CM}$=1.2V |
| LVDS Differential Input Low Threshold | $V_{TL(LVDS)}$ | -100 | - | - | mV | (1) $V_{CM}$=1.2V |
| LVDS Common Mode Voltage | $V_{CM}$ | 1.125 | - | 1.375 | V | (1) |
| LVDS Differential Input Voltage | $\|V_{ID}\|$ | 100 | - | 600 | mV | (1) |
| LVDS Terminating Resistor | $R_T$ | - | 100 | - | Ohm | - |

**<Note!>**

1) The parameters of LVDS signals are defined as the following figures.

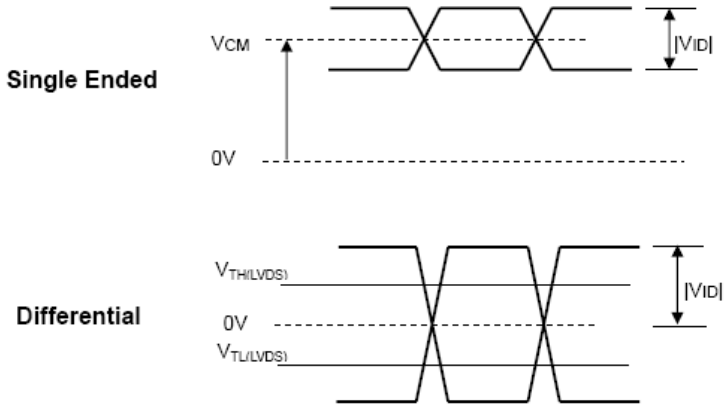


2. LVDS Data Format

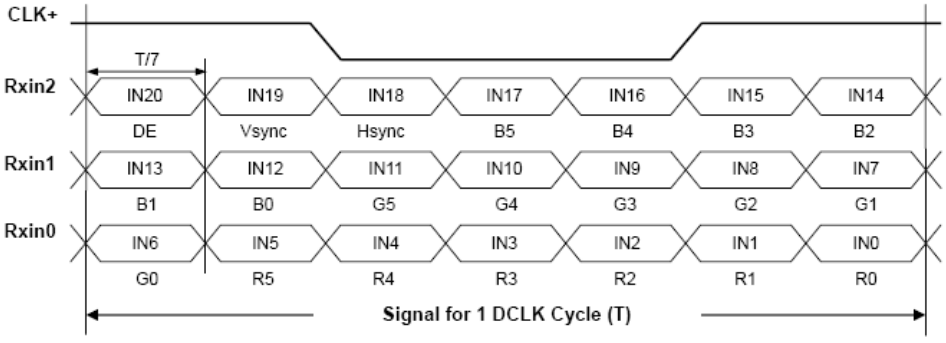



© **Nautilus Hyosung, Inc.** All Rights Reserved.

3. Color Data Input Assignment

The brightness of each primary color (red, green and blue) is based on the 6-bit gray scale data input for the color. The higher the binary input the brighter the color. The table below provides the assignment of color versus data input.

**<Note!>**

1) 0: Low Level Voltage, 1: High Level Voltage


**Nautilus Hyosung, Inc.** All Rights Reserved.

► Optical Characteristics

1. Test Conditions

| Item | Symbol | Value | Unit |
|---|---|---|---|
| Ambient Temperature | Ta | 25±2 | °C |
| Ambient Humidity | Ha | 50±10 | %RH |
| Supply Voltage | $V_{CC}$ | 3.3 | V |
| Input Signal | According to typical value in " ELECTRICAL CHARACTERISTICS" | | |
| LED Light Bar Input Current | $I_L$ | 40 | mA |

The measurement methods of optical characteristics are shown in next table. The following items should be measured under the test conditions described in above table and stable environment shown in Note 5).

2. Optical Specifications

**<Note!>**

1) Definition of Viewing Angle (Θx, Θy):

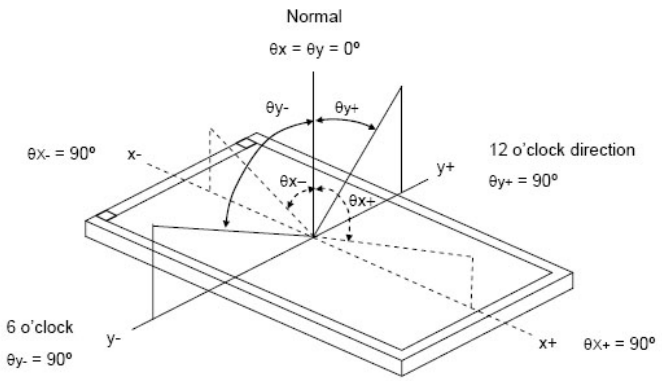



© **Nautilus Hyosung, Inc.** All Rights Reserved.

2) Definition of Contrast Ratio (CR):
The contrast ratio can be calculated by the following expression.
Contrast Ratio (CR) = L63 / L0
L63: Luminance of gray level 63
L 0: Luminance of gray level 0
CR = CR (1)
CR (X) is corresponding to the Contrast Ratio of the point X at Figure in Note (6).

3) Definition of Response Time ($T_R$, $T_F$):

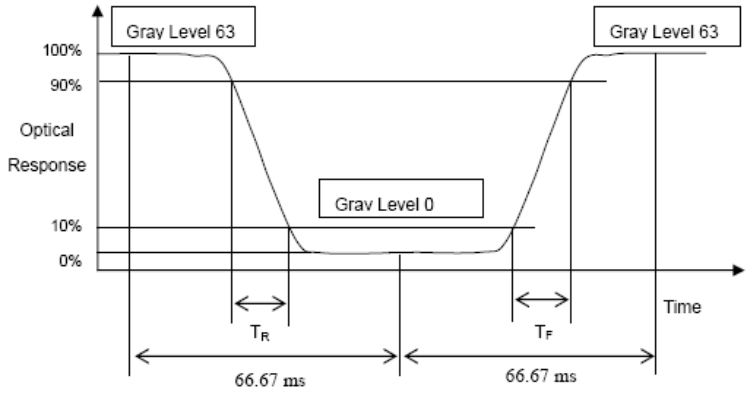


4) Definition of Average Luminance of White (LAVE):
Measure the luminance of gray level 63 at 5 points
LAVE = [L (1)+ L (2)+ L (3)+ L (4)+ L (5)] / 5
L (x) is corresponding to the luminance of the point X at Figure in Note (6)

5) Measurement Setup:
The LCD module should be stabilized at given temperature for 20 minutes to avoid abrupt temperature change during measuring. In order to stabilize the luminance, the measurement should be executed after lighting Backlight for 20 minutes in a windless room.

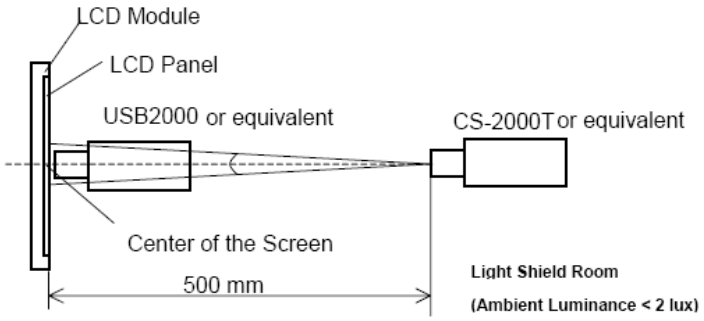


6) Definition of White Variation (δW):
Measure the luminance of gray level 63 at 5 points
δW5p = Maximum [L(1) ~ L(5)] / Minimum [L(1) ~ L(5)]
δW13p = Maximum [L(1) ~ L(13)] / Minimum [L(1) ~ L(13)]


**Nautilus Hyosung, Inc.** All Rights Reserved.

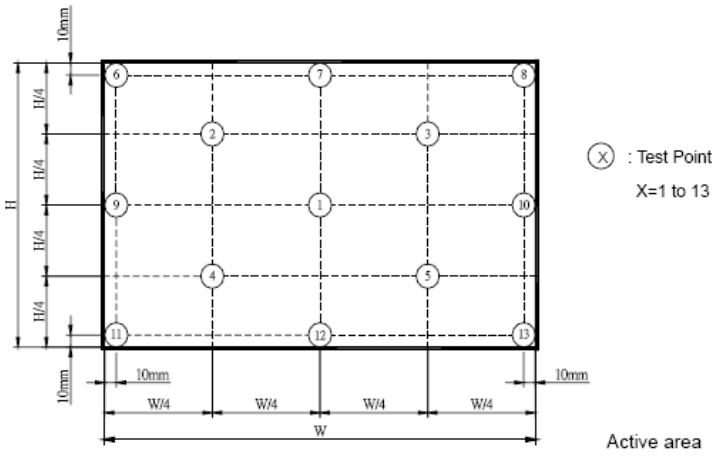


7) The listed optical specifications refer to the initial value of manufacture, but the condition ofthe specifications after long-term operation will not be warranted.

► Reliability Test Item

| Test Item | Test Condition |
|---|---|
| High Temperature Storage Test | 60ºC, 240 hours |
| Low Temperature Storage Test | -20ºC, 240 hours |
| Thermal Shock Storage Test | -20ºC, 0.5hour←→60℃, 0.5hour; 100cycles, 1hour/cycle |
| High Temperature Operation Test | 50ºC, 240 hours |
| Low Temperature Operation Test | 0ºC, 240 hours |
| High Temperature & High Humidity Operation Test | 50ºC, RH 80%, 240hours |
| ESD Test (Operation) | 150pF, 330Ω, 1sec/cycle<br>Condition 1 : Contact Discharge, ±8KV<br>Condition 2 : Air Discharge, ±15KV |
| Shock (Non-Operating) | 220G, 2ms, half sine wave,1 time for each direction of ±X,±Y,±Z |
| Vibration (Non-Operating) | 1.5G / 10-500 Hz, Sine wave, 30 min/cycle, 1cycle for each X, Y, Z |

**<Note!>**

1) criteria : Normal display image with no obvious non-uniformity and no line defect.
2) Evaluation should be tested after storage at room temperature for more than two hour
3) At testing Vibration and Shock, the fixture in holding the module has to be hard and rigid enough so that the module would not be twisted or bent by the fixture.


© **Nautilus Hyosung, Inc.** All Rights Reserved.

## Modem Board

► This board is composed of Silicon Laboratories' ISOmodem and Integrated DAA. The ISOmodem® family of products is a complete modem ranging in speed from 56,000 bps to 2400 bps. Offered as a chipset with the Si2457 system-side device and the Si3018 line-side device, the ISOmodem utilizes Silicon Laboratories' patented direct access arrangement (DAA) technology to provide a programmable telephone line interface with an unparalleled level of integration. These compact solutions eliminate the need for a separate DSP, modem controller, codec, transformer, relay, opto-isolators, clocking crystal, and 2-4 wire hybrid. The device is ideal for embedded modem applications due to their flexibility, small footprint, and minimal external component count.

► Features

1. Data modem formats
2. ITU-T, Bell
3. 300 bps up to 56 kbps
4. V.21,V.22, V.29 Fast Connect
5. V.42, V.42bis, MNP2-5
6. Automatic rate negotiation
7. Type I and II caller ID decode
8. UART interface
9. AT command set support
10. SMS / MMS support
11. Integrated DAA
    - Over 6000 V Capacitive isolation
    - Parallel phone detect
    - Globally-compliant line interface
12. 27 MHz clock input
13. Single 3.3 V power supply
14. Firmware upgradeable
15. EEPROM interface
16. Pb-free, RoHS Compliant

► Block Diagram

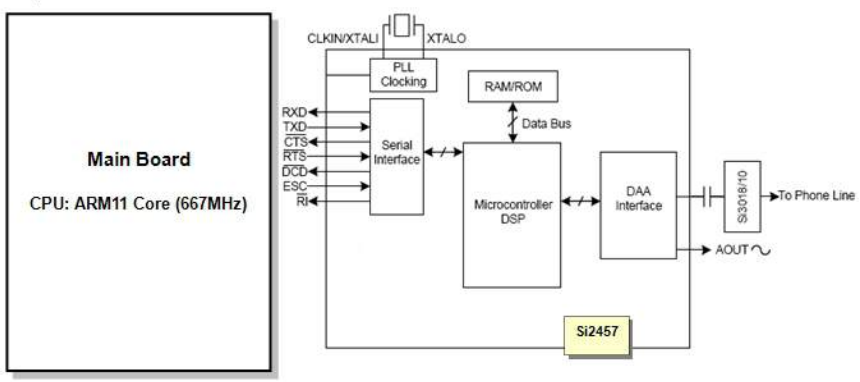



**Nautilus Hyosung, Inc.** All Rights Reserved.

► Pin Assign

| | | |
|---|---|---|
| CN24 | 1 | +3V3 |
| | 2 | +3V3 |
| | 3 | GND |
| | 4 | GND |
| | 5 | LnRESET |
| | 6 | MODEM_nCD |
| | 7 | MODEM_nDSR |
| | 8 | M_SPKO(Sound Out) |
| CN25 | 1 | MODEM_nRTS |
| | 2 | MODEM_RXD |
| | 3 | MODEM_TXD |
| | 4 | MODEM_nRI |
| | 5 | MODEM_nDTR |
| | 6 | MODEM_nCTS |
| | 7 | GND |


© **Nautilus Hyosung, Inc.** All Rights Reserved.

# Encryption PIN Pad

▶ EPP(Encrypted PIN Pad) is a device that encrypts sensitive data such as customers' card information and passwords, which requires the highest level of security, and transmits it to the Host. Therefore, if EPP problem occurs in the field, verify the problem and replace the entire unit. You cannot disassemble the internal components or replace them individually.

The following figure is the back of the EPP. The functions and roles of each part are summarized as below.

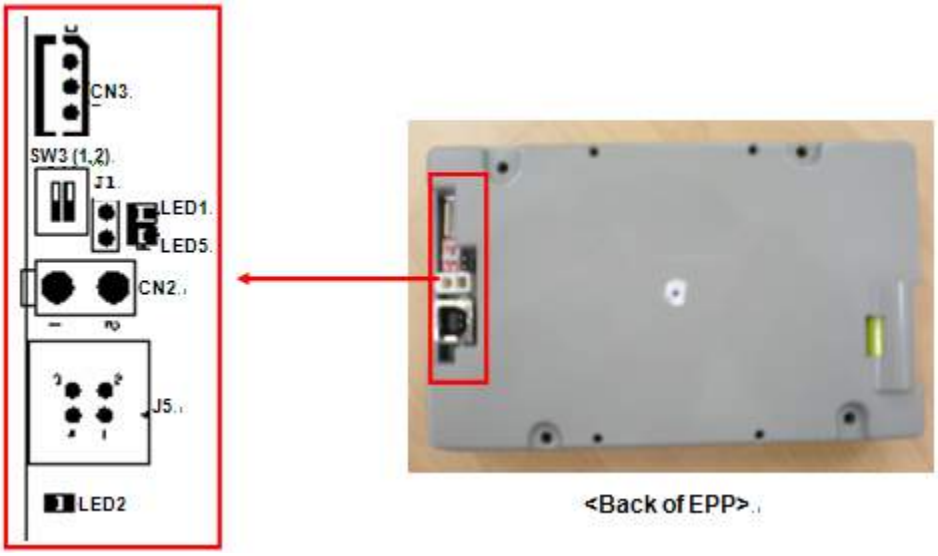

<Back of EPP>

| # | Labeling | Default Setting | | Description | Remark |
|---|---|---|---|---|---|
| 1 | CN2 | - | | Power connector(5V) | |
| 2 | CN3 | - | | Firmware downloading connector | Due to security issues, no repair is possible in the field |
| 3 | SW3(1,2) | 1 | OFF | NV-RAM is clear when No.1 switch is turned ON | |
| | | 2 | OFF | Serial communication | |
| | | | On | USB communication. | |
| 4 | J1 | Open | | Used for downloading the Firmware or turning off the fuse for security reason. | |
| 5 | J5 | - | | USB communication connector | |


**Nautilus Hyosung, Inc.** All Rights Reserved.

## Common Occurred Problem List

▶ Common Occurred Problem List

1. In case the EPP cover is detached-- to whatever extent-- due to a mistake made by an operator or the maintenance personnel
2. In case there is a damage caused by any external shock or static electricity
3. In case the EPP is not connected with an earth cable, which makes it vulnerable to static electricity
4. In case the battery is discharged

## LED Operation Check

▶ There are 3 LEDs at the back of the EPP. With the status of these 3 LEDs, the EPP operation condition can be easily checked.

| # | LED | Description | Remark |
|---|---|---|---|
| 1 | LED1<br>(Power LED) | Whether the power supply is in "normal" status<br>(If it is normal, red light will be turned on LED) | |
| 2 | LED2<br>(Status LED) | Whether the EPP is in "normal" operation<br>(If it is normal, LED will blink) | |
| 3 | LED5<br>(NV-RAM LED) | Whether the NV-RAM is properly cleared.<br>(If it is normal, red light will turned on LED) | |

## Troubleshooting

▶ Since the problem in this unit involves a security issue, you should replace the entire unit when encountering a problem.
If a problem is confirmed, turn off the power, remove the power cable and bracket, and then replace the unit with a new one. For the assembly of the unit, follow the reverse order.

1. If LED1 is off, check the cable connection to see if the power supply is okay.
2. If LED1 is on and LED2 is off, it means EPP is in abnormal operation. Therefore, replace the EPP


© **Nautilus Hyosung, Inc.** All Rights Reserved.

NAUTILUS HYOSUNG

# Chapter 4
# Main Control Board

## Contents

Overview ..... 4-1
Basic Specification ..... 4-2
CPU Block Diagram ..... 4-3
Board Block Diagram ..... 4-4
Cortex-A8 M/B Layout ..... 4-5


© **Nautilus Hyosung, Inc.** All Rights Reserved.

# Overview

► This motherboard is applied to NH2600 based on Window CE.

- S5PC100 834 MHz (ARM Cortex-A8) CPU
- SDRAM (256MB), Flash Memory (256 MB)
- Operating system : Windows CE 6.0
- Serial ports : 8 Ports
- Communication : Modem & TCP/IP Selectable

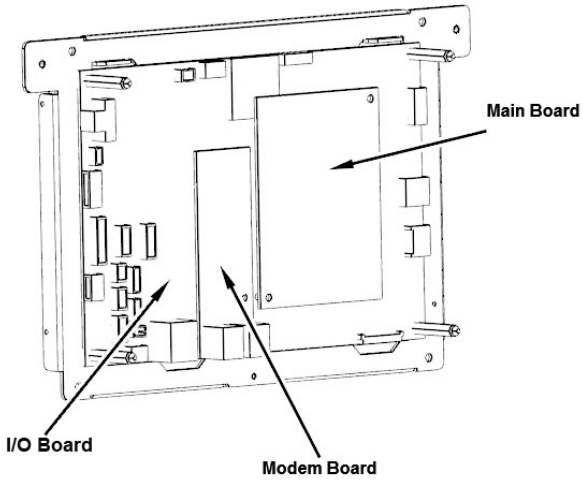



© **Nautilus Hyosung, Inc.** All Rights Reserved.

# Basic Specification

| Item | | Specification | | Remarks (Option) |
|---|---|---|---|---|
| Main Controller | CPU | Samsung S5PC100 | | 833MHz |
| | Operating System | Windows CE 6.0 | | |
| Memory | DDR2 | 256MB | | 128MB X 2EA(32Bit Interface) |
| | NAND Flash | 256MB | | 8bit Interface |
| Clock | PLL, MPLL, EPLL | 12MHz | | |
| | USB | 12MHz | | |
| | DAC/HDMI | 27MHz | | |
| | RTC | 32.768kHz | | |
| JTAG | JTAG | 1 EA | | |
| Security | Security | One-IO EEPROM | | |
| RESET | Reset IC | XC6107-E029MR | | 2.9V monitoring / 200ms |
| POWER | Input | 3.3V | | |
| | Output | 1.8V | XC6210-B182MR | For DDR2 |
| | | 1.35V | EN5311QI | For ARM |
| | | 1.3V | EN5311QI | For ARM, CAM, ETC |
| | | 1.2V | XC6209-F122MR | For PLL |
| | | 1.2V | XC6209-F122MR | For Alive and HDMI |
| Jumper | Jumper | 4 bit | | Boot mode select |
| Battery | Coin Battery | CR2032 Type | | For RTC |
| Interface (supported through I/O Board) | Serial Ports | 4 Ports | | Onchip considered only. |
| | USB Ports | 2 Ports | | 1.1 Host<br>2.0 Device |
| | MMC | 1 Port | | SD Card |
| | MODEM | 1 Port | | |
| | SPI | 1 Port | | |
| | LCD | RGB | | RGB 16bit |
| | | HDMI | | LVDS |
| | AC97 | 1 EA | | |
| | GPIO | 4 bit | | |
| | PWM | 1 Port | | |
| | I2C I/F | 1EA | | Vibration motor |
| | Camera I/F | ITU R BT-656 | | |
| Dimension | Dimension | 100 X 75 | | mm |


© **Nautilus Hyosung, Inc.** All Rights Reserved.

# CPU Block Diagram

► CPU Block Diagram

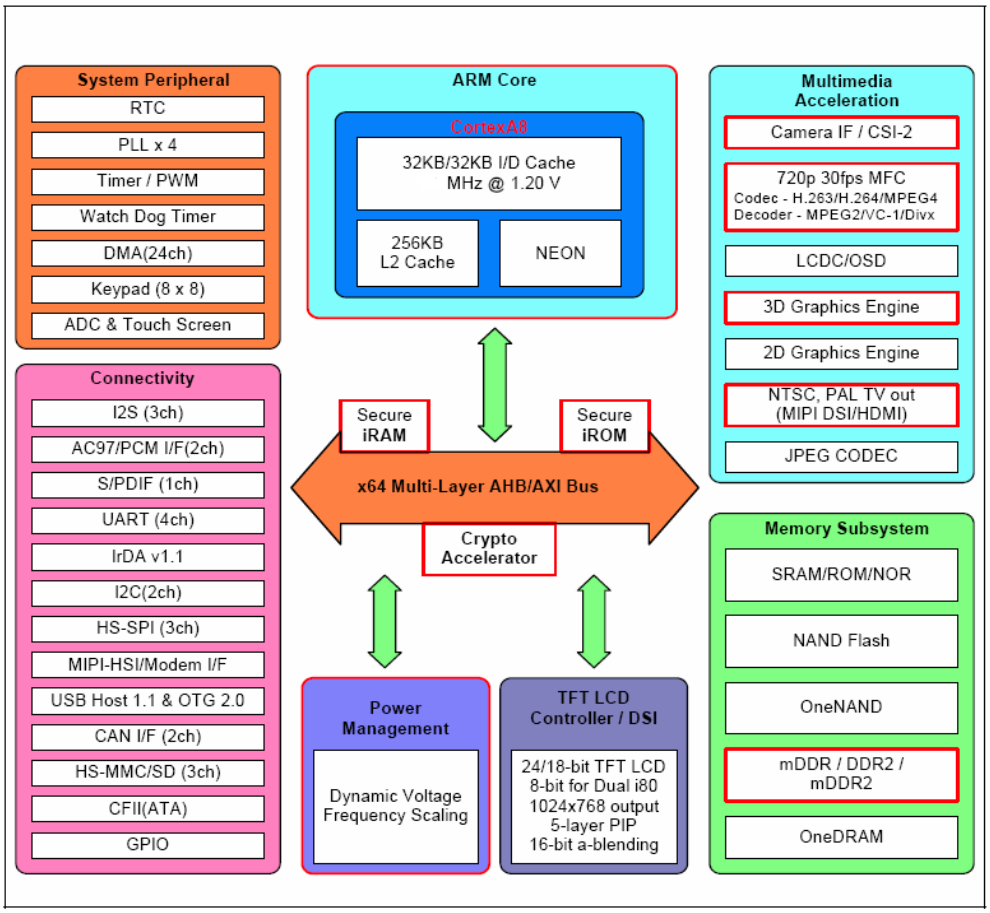


**S5PC100 Block Diagram**


© **Nautilus Hyosung, Inc.** All Rights Reserved.

# Board Block Diagram

► Board Block Diagram

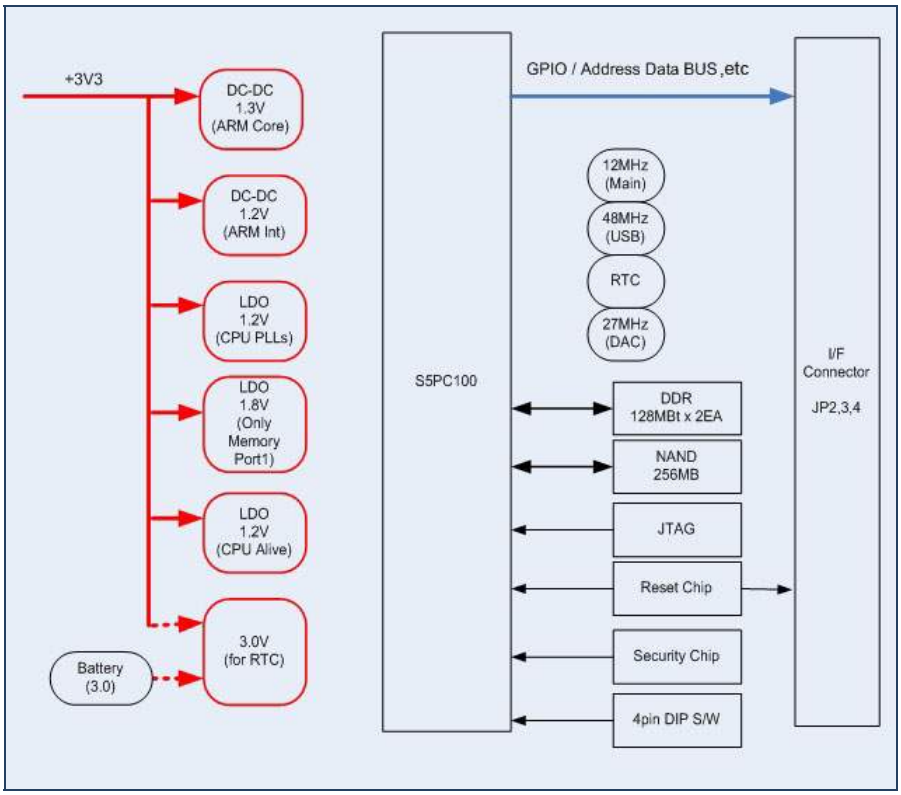



© **Nautilus Hyosung, Inc.** All Rights Reserved.

# Cortex-A8 M/B Layout

► Cortex-A8 M/B Layout

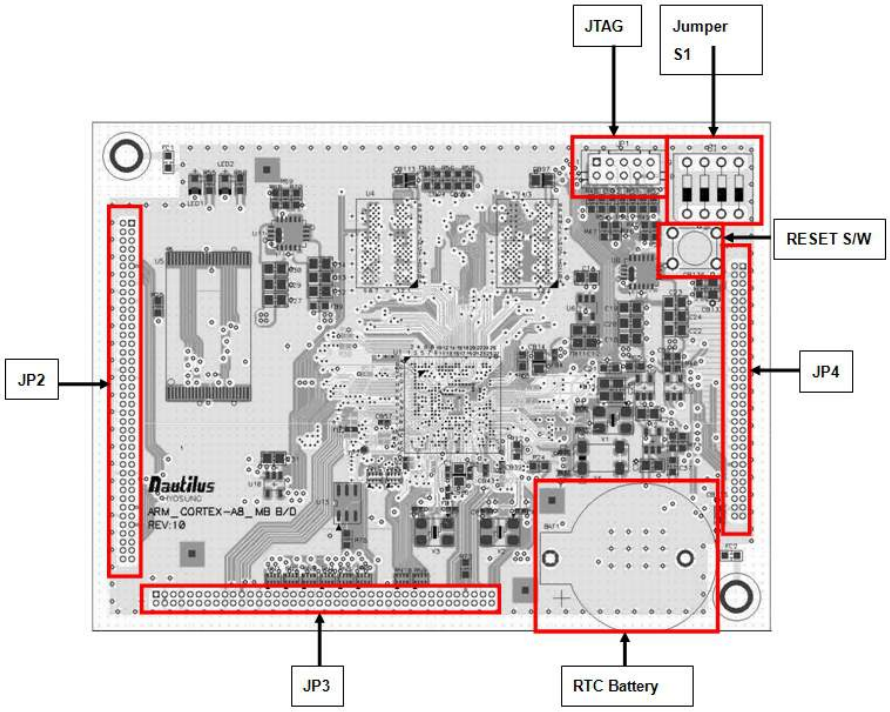



© **Nautilus Hyosung, Inc.** All Rights Reserved.

Chapter 5

# Power Supply

## Contents

Overview ..... 5-1
System Power On/Off ..... 5-2
    System Power On ..... 5-2
    System Power Off ..... 5-2
Basic Specification ..... 5-3


© **Nautilus Hyosung, Inc.** All Rights Reserved.

# Overview

► The power supply unit provides that voltage to various modules within the system. The power supply unit allows the user to turn on/off the system and perform other sequences.

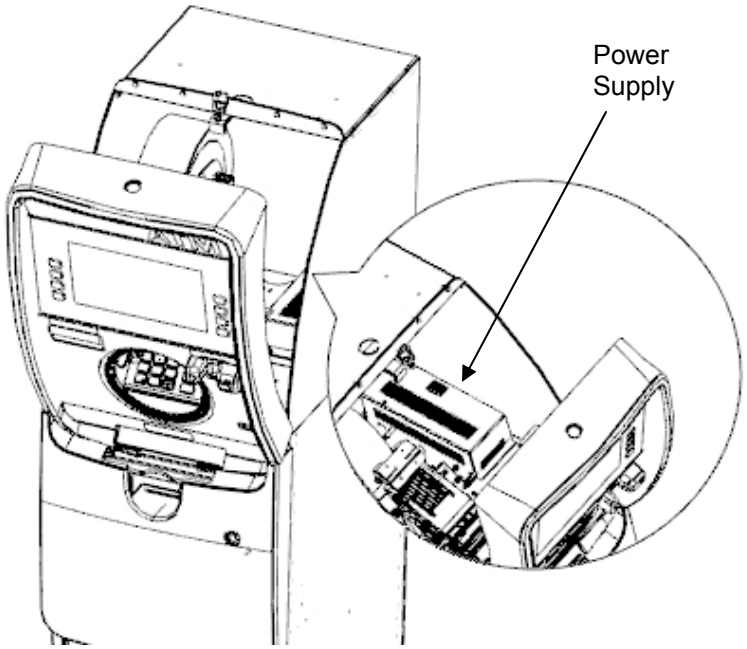



© **Nautilus Hyosung, Inc.** All Rights Reserved.

# Switching Power On/Off

## Switching Power On

▶ The power supply unit allows the user to turn on/off the system, enter power-failure mode, and perform other sequences.

1. The system turning-on process is as follows
2. Open the upper front door
3. Press the power switch (“I”).
4. The system will be turn on automatically



## Switching Power Off

▶ The system turning-off process is as follows

1. Open the upper front door
2. Press the power switch (“O”)
3. The system will be shut down automatically
4. The operating system will shut down then power will turn off.




© **Nautilus Hyosung, Inc.** All Rights Reserved.

# Basic Specification

► Environmental Condition

| Condition | Operating | Storage | Condition | Operating | Movement |
|---|---|---|---|---|---|
| Temperature | -5 ~ 55℃ (23 ~ 131°F) | -20 ~ 75℃ (-4 ~ 167°F) | Vibration | 0.5G | 2.0G |
| Humidity | 20 ~ 90% | 20 ~ 90% | Impact | 5.0G | 10.0G |

► Withstanding Voltage & Insulation Resistance

| Division | Test Point | Test Input Voltage | Test Condition |
|---|---|---|---|
| Withstanding Voltage | PRI – SEC | AC 3000V | During of Test: 1 minute CUTOFF Current: 10mA |
| | PRI - F.G | AC 1800V | |
| Insulation Resistance | PRI – SEC | DC 500V | During of Test: 1 minute Insulation RES: ≥10Mohm |
| | PRI - F.G | DC 500V | |

► Input Specification

| Division | Specification |
|---|---|
| Input Connection | AC INLET(250Vac 10A) |
| Input Voltage/ Current | Free Voltage 100~240Vac ±10% / 3.2A MAX |
| Frequency | 47~63Hz (Normal:50/60Hz) |
| POWR Factor | - |
| Efficiency | AC 110V 80% typ. / AC 220V 82% typ. |
| Hold-Up Time | 16.7ms MIN |
| Inrush Current | 70A MAX |
| Leakage Current | 3.5mA MAX |

► Output Specification

| Division | Specification | | | Unit |
|---|---|---|---|---|
| Channel | +5 | +12 | +24 | Vdc |
| Wattage | 15.0 | 18.0 | 72.0 | W |
| Voltage | 4.75 ~ 5.25 | 11.4 ~ 12.6 | 21.6 ~ 26.4 | Vdc |
| Current | 0.5 ~ 3.0 (Peak 3.5A) | 0.1 ~ 1.5 | 0 ~ 3.0 (Peak 15A) | A |
| Method | DC/DC | Switching | Switching | - |
| Ripple | 50 | 120 | 240 | mVp-p |
| Noise | 0.1 | 0.3 | 0.5 | Vp-p |
| Shoot | ±3 | ±3 | ±5 | % |
| OVP | 5.6 ~ 7.5 | 13.3 ~ 15.6 | 26.5 ~ 31.2 | Vdc |
| OCP | S.C | S.C | S.C | A |

**<Note!>**

1. RIPPLE & NOISE test condition: 20MHz, 10uF(ELEC)/0.1uF(CER)


© **Nautilus Hyosung, Inc.** All Rights Reserved.

2. S.C: SHORT CIRCUIT
3. +5V, +12V total output cannot exceed 23.5W

►Connector Configuration

1. AC INPUT

| Division | PIN No. | Configuration | Size | Color |
|---|---|---|---|---|
| AC IN | 1 | L | 18AWG/UL1015 | Black |
| | 2 | F.G | 18AWG/UL1015 | GRN/YEL |
| | 3 | N | 18AWG/UL1015 | White |

2. AC OUTPUT

| Division | PIN No. | Configuration | Size | Color |
|---|---|---|---|---|
| AC OUT | 1 | N | 18AWG/UL1015 | White |
| | 2 | F.G | 18AWG/UL1015 | GRN/YEL |
| | 3 | L | 18AWG/UL1015 | Black |

3. MBD

| Division | PIN No. | Configuration | Size | Color |
|---|---|---|---|---|
| CN3 | 1 | S.G | 18AWG/UL1007 | Black |
| | 2 | +5V | 18AWG/UL1007 | Red |
| | 3 | S.G | 18AWG/UL1007 | Black |
| | 4 | N.C | - | - |
| | 5 | +5V | 18AWG/UL1007 | Red |
| | 6 | +12V | 18AWG/UL1007 | Yellow |

4. SPR

| Division | PIN No. | Configuration | Size | Color |
|---|---|---|---|---|
| CN4 | 1 | +5V | 18AWG/UL1007 | Red |
| | 2 | +5V | 18AWG/UL1007 | Red |
| | 3 | S.G | 18AWG/UL1007 | Black |
| | 4 | S.G | 18AWG/UL1007 | Black |
| | 5 | S.G | 18AWG/UL1007 | Black |
| | 6 | N.C | - | - |
| | 7 | +24V | 18AWG/UL1007 | White |
| | 8 | +24V | 18AWG/UL1007 | White |


© **Nautilus Hyosung, Inc.** All Rights Reserved.

5. CDU

| Division | PIN No. | Configuration | Size | Color |
|---|---|---|---|---|
| CN5 | 1 | +5V | 18AWG/UL1007 | Red |
| | 2 | +5V | 18AWG/UL1007 | Red |
| | 3 | S.G | 18AWG/UL1007 | Black |
| | 4 | +12V | 18AWG/UL1007 | Yellow |
| | 5 | N.C | - | - |
| | 6 | S.G | 18AWG/UL1007 | Black |
| | 7 | S.G | 18AWG/UL1007 | Black |
| | 8 | +24V | 18AWG/UL1007 | White |
| | 9 | +24V | 18AWG/UL1007 | White |
| | 10 | S.G | 18AWG/UL1007 | Black |


© **Nautilus Hyosung, Inc.** All Rights Reserved.

NAUTILUS HYOSUNG

Chapter 6

# Cash Dispenser Unit

## Contents


Overview ..... 6-1
Disassembly & Reassembly ..... 6-4
- Module Disassembly ..... 6-4
- Electronic Parts Disassembly ..... 6-6
- Motor Disassembly ..... 6-12
- Solenoid Disassembly ..... 6-13
- Clutch Disassembly ..... 6-15
- PCBA Disassembly ..... 6-17

Preventive Maintenance ..... 6-18
- Lubrication ..... 6-18
- Cleaning (Inspection) ..... 6-20

Parts Replacement ..... 6-22
- Required Tools for Replacement ..... 6-22
- How to Replace ..... 6-23

Troubleshooting ..... 6-24
Optional Cash Dispenser Unit: CDU-M ..... 6-25



© **Nautilus Hyosung, Inc.** All Rights Reserved.

# Overview

► Appearance & Dimension

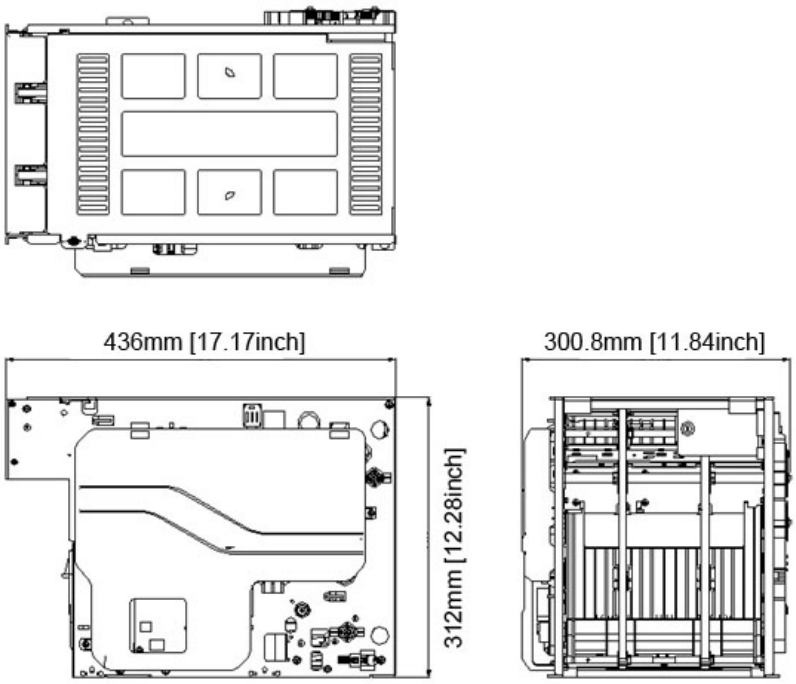



© **Nautilus Hyosung, Inc.** All Rights Reserved.

► Device Configuration

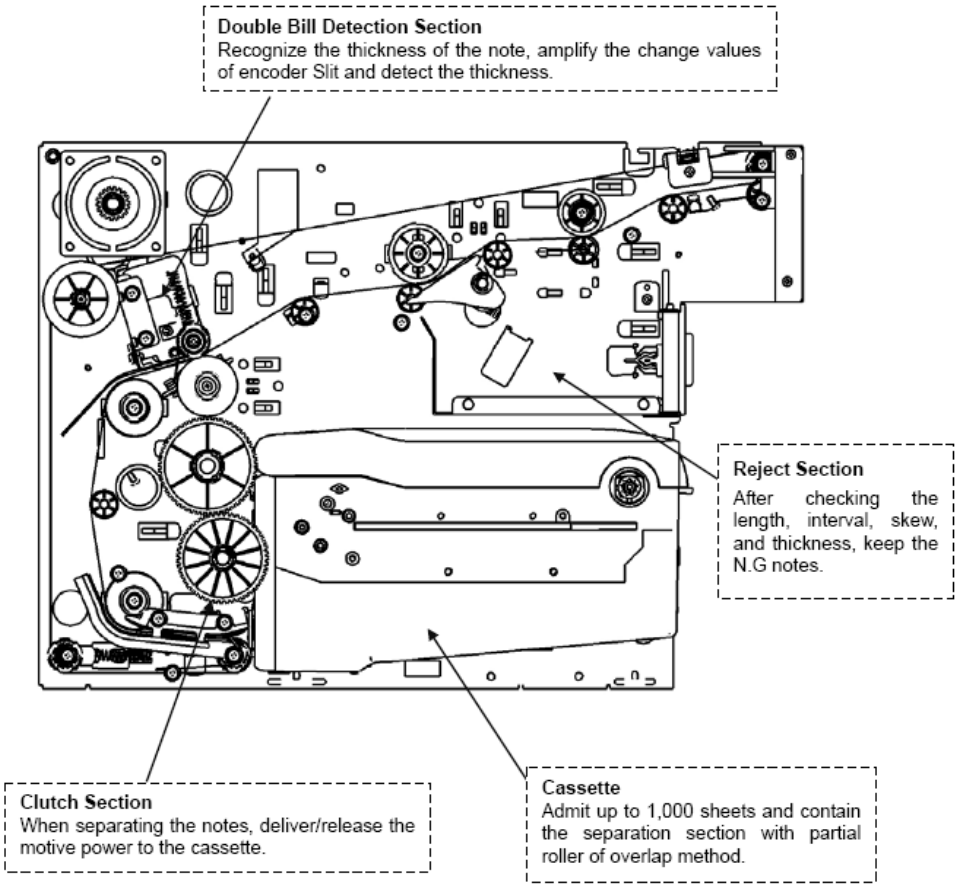


► Device Configuration Module

| Module | Description |
|---|---|
| Clutch Section | When dispensing the notes, deliver the motive power to the cassette to separate the notes. Then after separation, release the motive power. |
| Double Bill Detection Section | Detect the thickness of the separated note and if it is more than 2 sheets, obtain the data to make the notes rejected. |
| Cassette Section | Admit up to 1,000 sheets and contain the separation section (partial roller structure of overlap method). |
| Reject Section | After checking the length, interval, skew, and thickness of the separated notes, keep the N.G notes. |


© **Nautilus Hyosung, Inc.** All Rights Reserved.

► Specification

| Item | | Specification | Remarks |
|---|---|---|---|
| External Appearance | Dimension (mm) | 300.8(W)x312(H)x436(D)mm (11.84x12.28x17.17inch) | |
| Weight | Weight of the main body | 10Kg (22.05lb) | |
| | Weight of the cassette | Empty(2.37Kg (5.22lb)) / Full(1,000sheets) status (3.3Kg (7.28lb)) | |
| Media | Denomination | USA/Canadian Dollar | |
| | Media Size (LxH) | USA (156x66mm (6.14x2.6inch)) / Canada (152.4x70mm (6x2.76inch)) | |
| | Thickness | 0.09 ~ 0.11mm (0.0035~0.0043inch) | |
| Dispensing | Shutter Yes/No | No | Tray outside the main body |
| | Dispensing Speed | 4 sheets/sec | |
| | Maximum number | 40 sheets/transaction | |
| Separation | Separation Type | Friction Type | |
| Reject | Capacity | 200sheets | Based on new notes |
| | Security | No Key | |
| | Quantity Detection | No | Software Count |
| Cassette | Capacity | 1,000sheets | Based on new notes |
| | Loading Direction | Front Access | Front Access Type |
| | Detecting Remnants | No | |


© **Nautilus Hyosung, Inc.** All Rights Reserved.

# Disassembly & Reassembly

## Module Disassembly

► Disassembly of Double Bill Detection Section (7310000682)

1. Remove 2 screws (44651302,①) and disassemble Main Cover (4310000240,②).
2. Disassemble cable connector CS5/M1.
3. Remove 3 screws (44656302,③) and disassemble ASSY MOTOR (7310000670,④).
4. Remove 2 screws (44654303,⑤) and disassemble Shaft Reinforce (45131201,⑥).

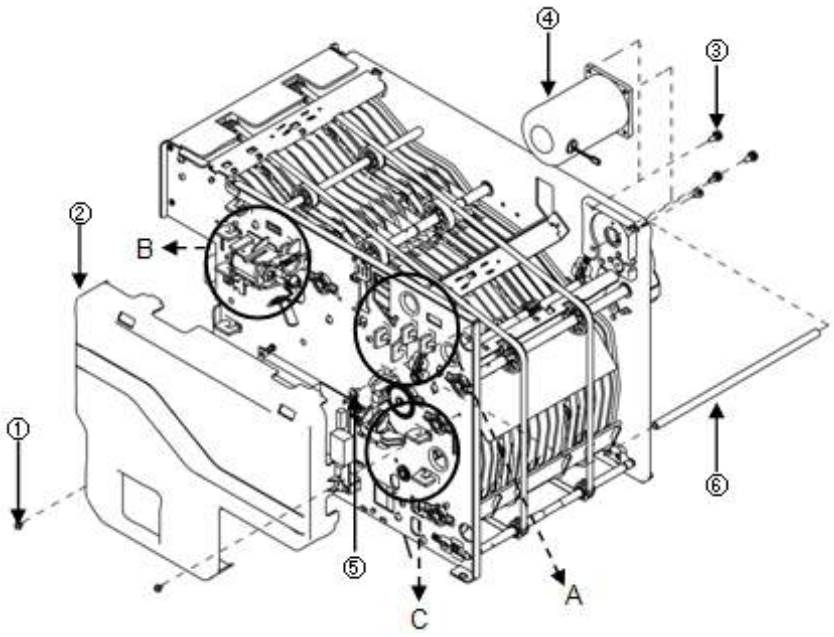


5. Remove 2 screws (44654303, ⑦) and disassemble ASSY PULLEY_ID (7310000671, ⑧).
6. Remove 2 screws (44654303,⑨) and disassemble ASSY PULLEY_DR (7310000683, ⑩).
7. Remove 1 screw (4650000132, ⑪) and disassemble GEAR Z36W08M10_DR (⑫).
8. Disassemble ASSY GEAR Z28W09M10_ID (⑬).


© **Nautilus Hyosung, Inc.** All Rights Reserved.

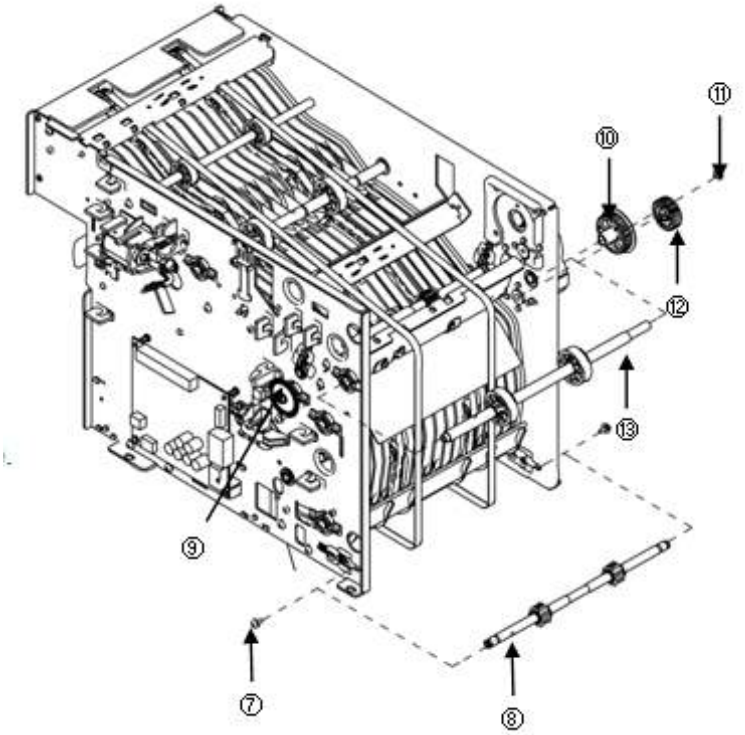


9. Remove 4 screws (44654303,⑭) and disassemble Double Bill Detection Section (7310000682, ⑮).
10. To assemble again, use the reverse order of disassembling.

**<Note!>** Be sure to insert the belt during assembling ASSY PULLEY and Double Bill Detection Section.

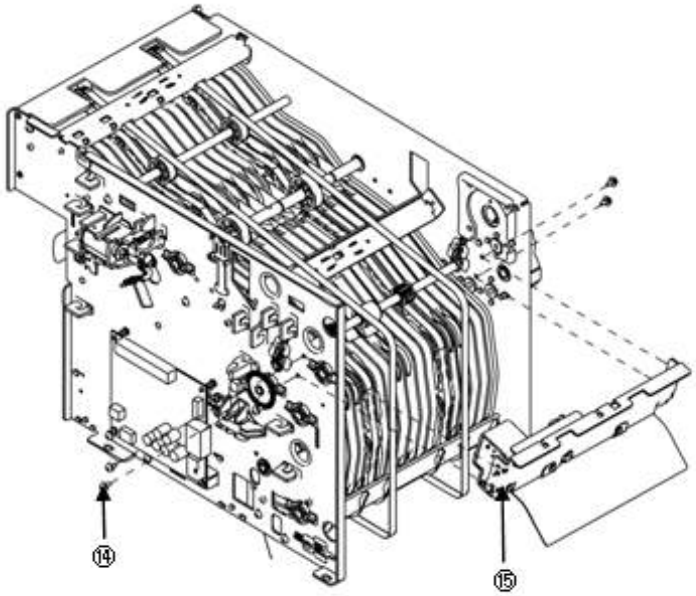



© **Nautilus Hyosung, Inc.** All Rights Reserved.

# Electronic Parts Disassembly

## Sensor Disassembly

► Location Map of Sensor

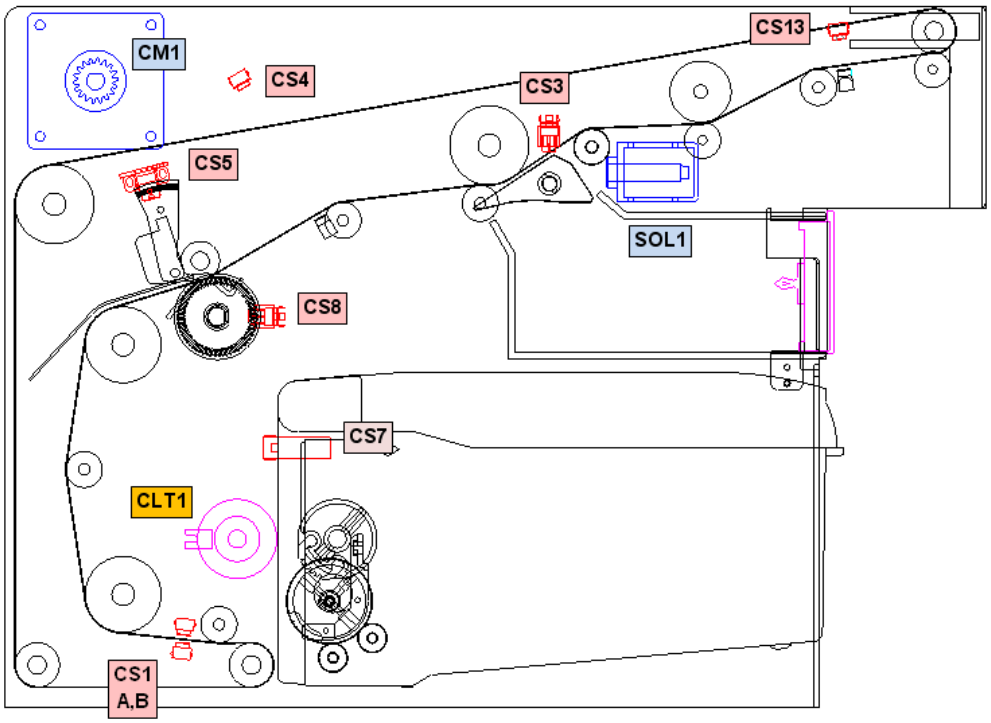



© **Nautilus Hyosung, Inc.** All Rights Reserved.

► Disassembly of Integrated Sensor

1) CS13 (21685202/21685201)

1. Disassemble main cover (4310000240). (Refer to No.1 of “Disassembly of Double Bill Detection Section”)
2. Disassemble CABLE (CS13) (Section B on figure of “Disassembly of Double Bill Detection Section”)
3. Remove 2 screws (44654303, ①) and disassemble Sensor ASSY (7310000689, ②).

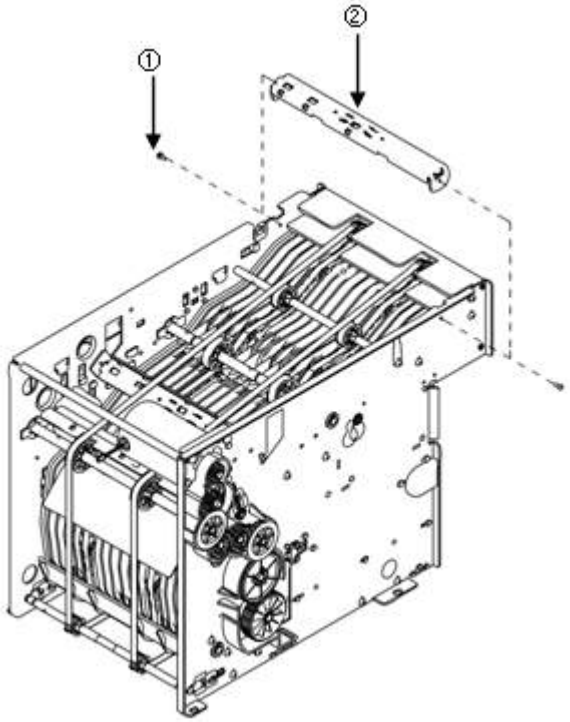


4. Remove 2 screws (44654303, ①) and disassemble holder (⑤) / sensor (21685201, ③) /sensor (21685202, ④).
5. To assemble again, use the reverse order of disassembling.

**<Note!>** Be sure to check the position of sensor and assemble it. (Refer to figure below)

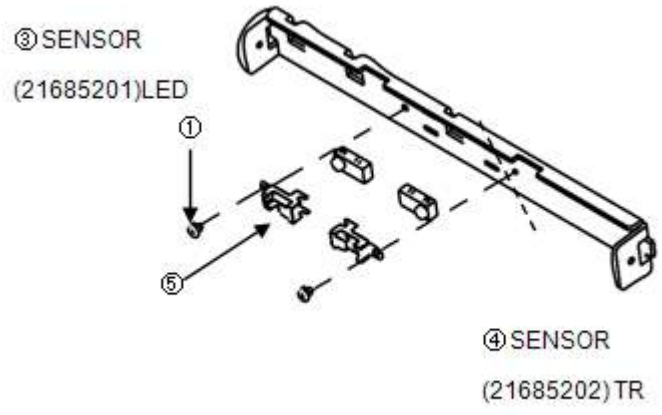



© **Nautilus Hyosung, Inc.** All Rights Reserved.

2) CS4 (21685201/21685202)

1. Disassemble main cover (4310000240). (Refer to 1 of “Disassembly of Double Bil l Detection Section”)
2. Disassemble cable (CS4). (Section A on figure of “Disassembly of Double Bill Detection Section”)
3. Remove 2 screws (44654303, ①) and disassemble Sensor Assy (7310000689, ②).

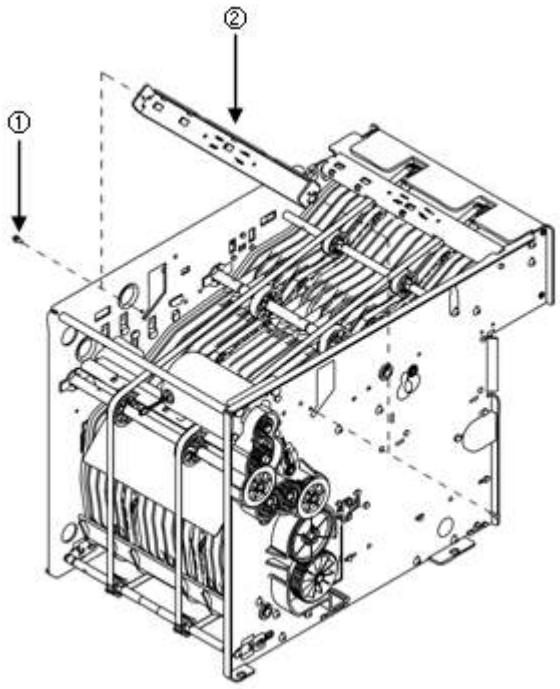


4. Remove 2 screws (44654303,①) and disassemble holder (⑤) to disassemble sensor (21685201, ③) and sensor (21685202,④)

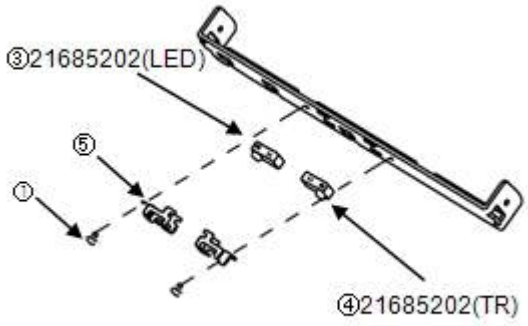


5. To assemble again, use the reverse order of disassembling.

**<Note!>** Be sure to check the position of sensor and assemble it. (Refer to [Fig. 6.5])


© **Nautilus Hyosung, Inc.** All Rights Reserved.

3) CS1_LED (21685201)

1. Separate cassette (7430002494) and and place the unit as shown in figure below.
2. Disassemble sensor (21685201, 2ea, ①) of ASSY MOLD LOWER DOWN (7310000678).
3. Disassemble cable connector (CS1_A,CS1_B) of SENSOR (21685201).

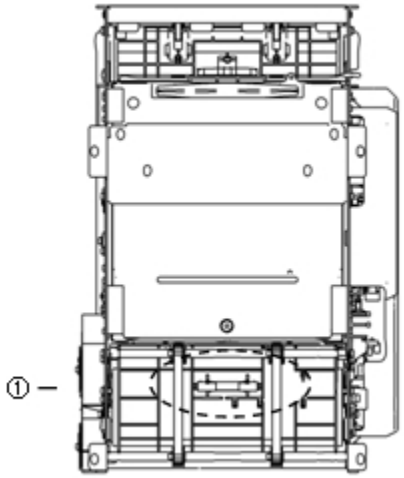


4. To assemble again, use the reverse order of disassembling.
   **<Note!>** Be careful for the direction of cable (CS1_A,CS1_B).

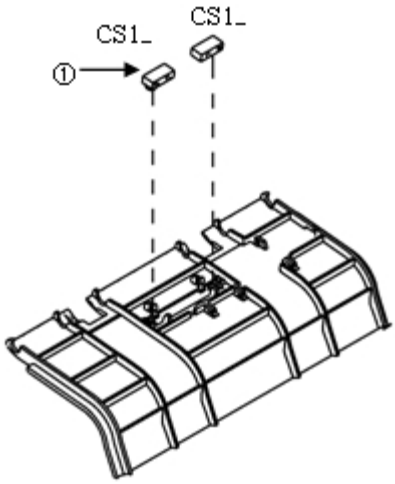



© **Nautilus Hyosung, Inc.** All Rights Reserved.

4) CS1_TR (21685202)

1. Separate the cassette (7430002494).

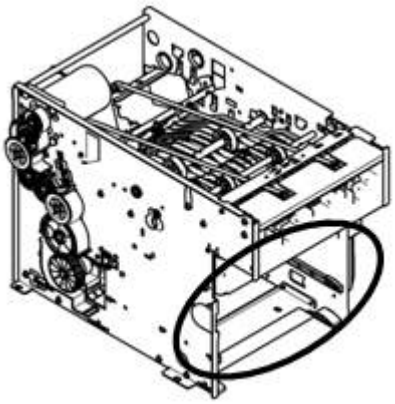

2. If the cassette is separated, the sensor (21685202) inside ASSY MOLD LOWER FEED UP (7310000679) will be shown.

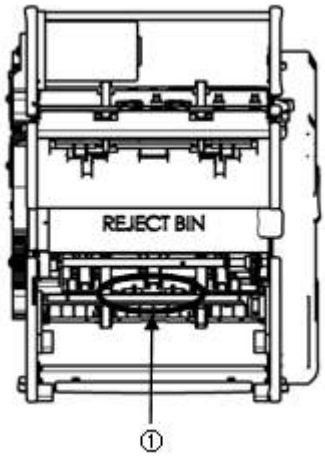


3. Disassemble sensor (21685202, 2ea, ②) as shown in figure.
4. Disassemble the cable connector (CS1_A,CS1_B) of sensor (21685201).
5. To assemble again, use the reverse order of disassembling.

**<Note!>** Be careful for the direction of the cable (CS1_A, CS1_B).

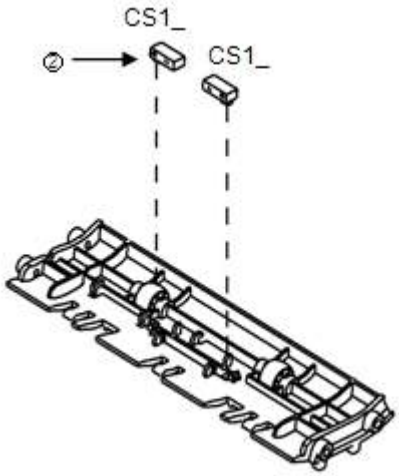



© **Nautilus Hyosung, Inc.** All Rights Reserved.

► Disassembly of Separated Type Sensor

1) CS3, CS8 (72335201)

1. Disassemble the main cover (4310000240). (Refer to 1 of “Disassembly of Double Bill Detection Section”)
2. Disassemble CABLE CS3/CS8.
3. Disassemble sensor (72335201, ①) on CS3: Section A pressing it in the direction of arrow.
4. Remove a screw (4650000132, CS8: ③) and disassemble encoder (44135304). Then disassemble the sensor (72335201, (②)) on section B pressing it in the direction of arrow.

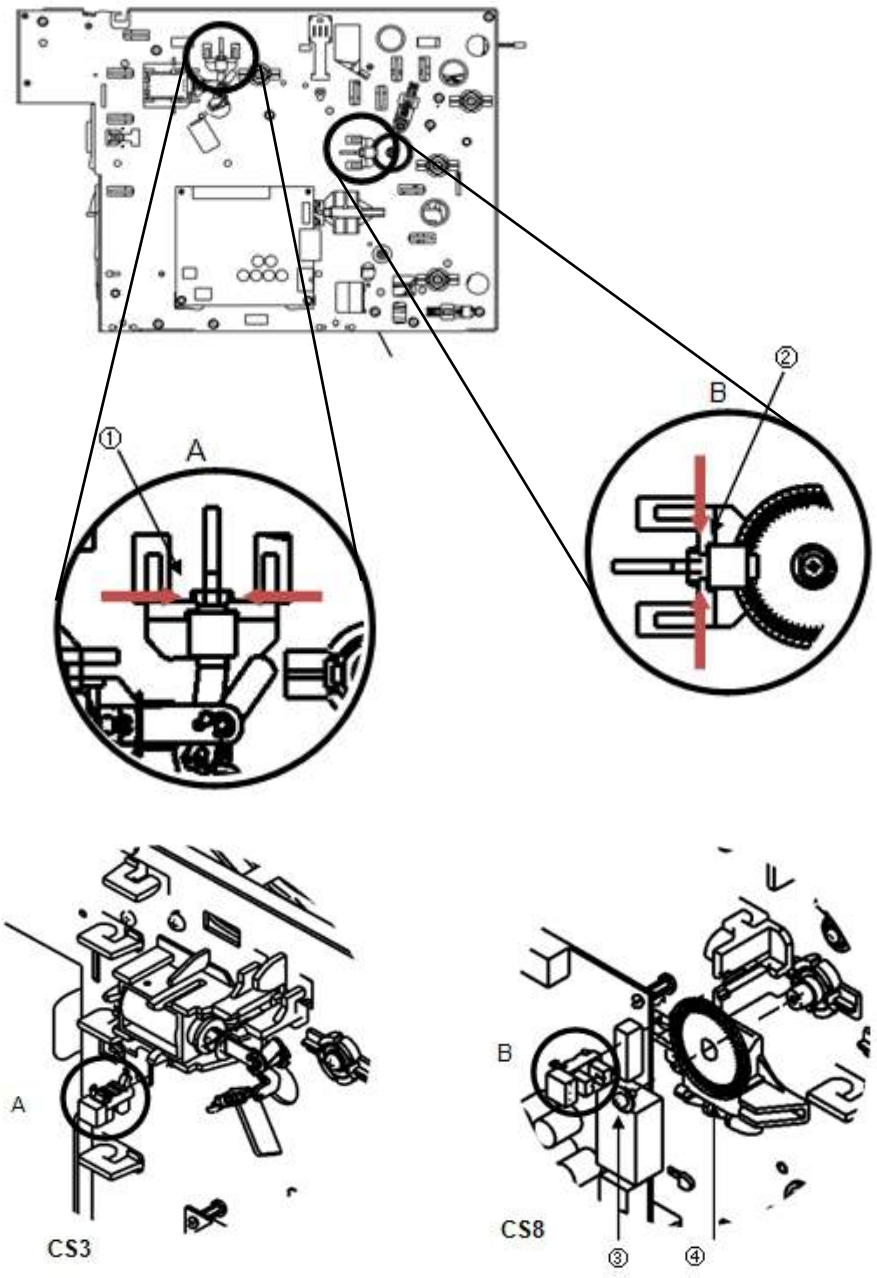


5. To assemble again, use the reverse order of disassembling.


© Nautilus Hyosung, Inc. All Rights Reserved.

## Motor Disassembly (7310000670)

► Motor Disassembly

1. After disassembling cable (M1) on section A, remove 3 screws (44656302, ①) and disassemble Assy Motor (7310000670,②)

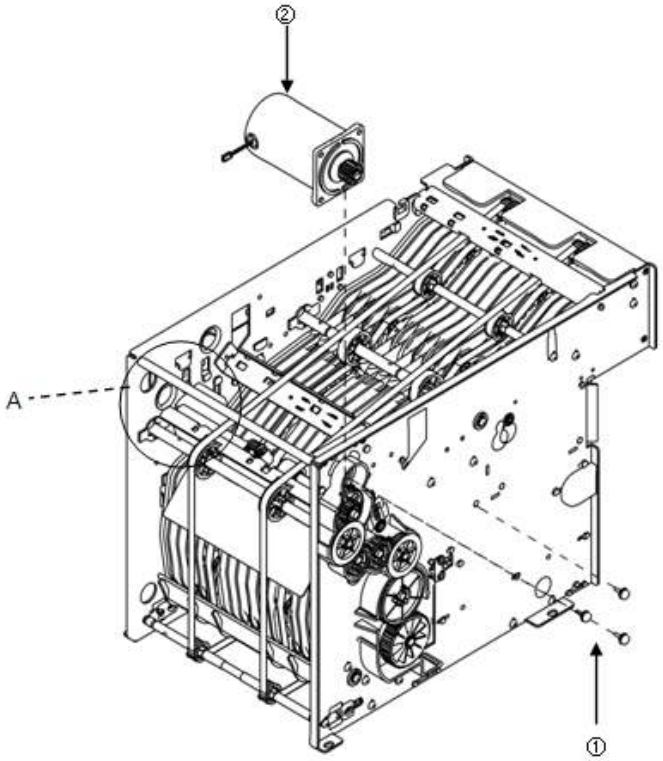


2. Disassemble GEAR (4350000431, ③) and E-RING(44950408,④) from Assy Motor (7310000670).

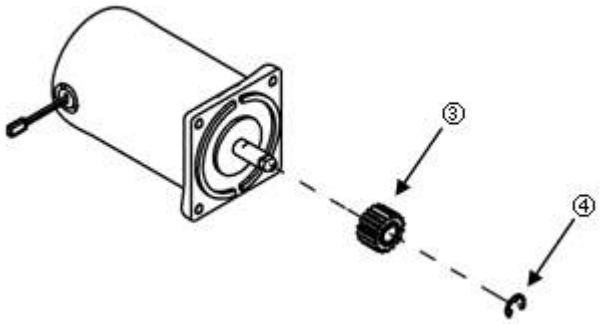


3. To assemble again, use the reverse order of disassembly.


© **Nautilus Hyosung, Inc.** All Rights Reserved.

## Solenoid Disassembly (32121901)

► Solenoid Disassembly

1. Remove 2 screws (44651302, ①) and disassemble the main cover (4310000240, ②)
2. Disassemble the cable (SOL1) on section A.

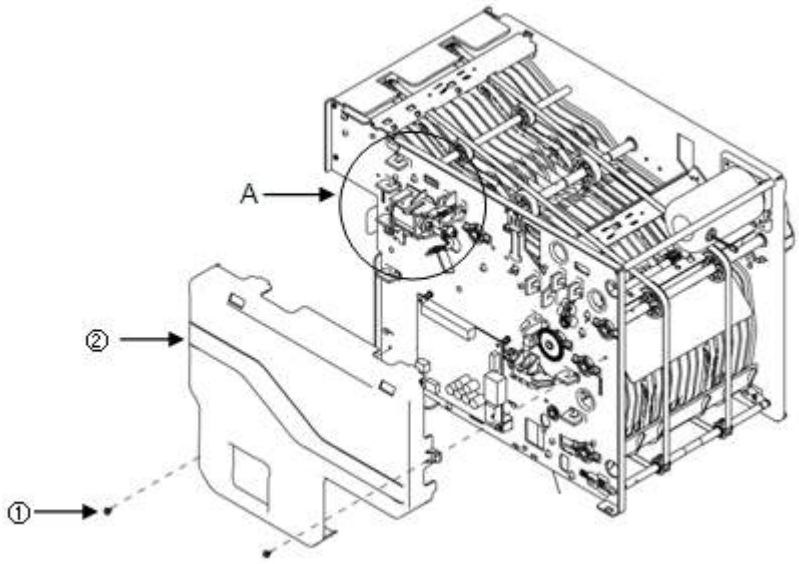


3. Disassemble e-ring (4495404, ③) connected to solenoid and bracket. Then disassemble Assy Solenoid (7310000686).

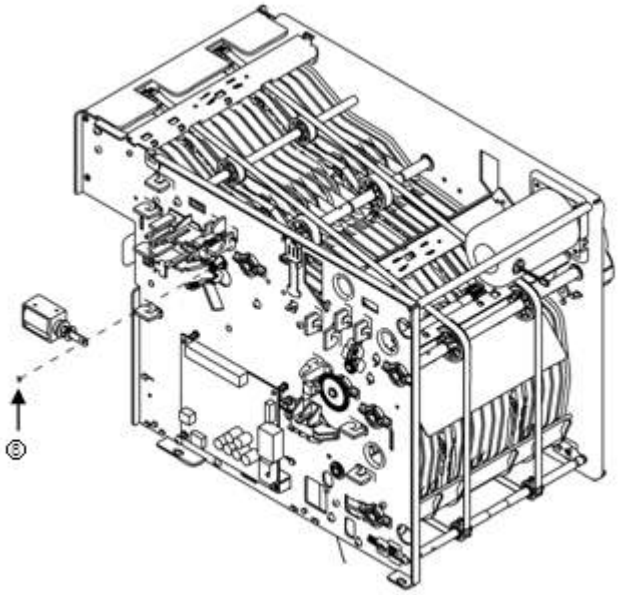



© **Nautilus Hyosung, Inc.** All Rights Reserved.

4. Disassemble the solenoid (32121901) from Solenoid Assy (7310000686).

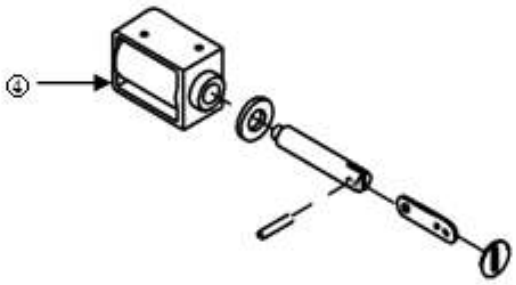

5. To assemble again, use the reverse order of disassembly.
**<Note!>** Be careful not to miss the rubber damper (33630701).


© **Nautilus Hyosung, Inc.** All Rights Reserved.

## Clutch Disassembly (5637000013)

► Clutch Disassembly

1. Disassemble the main cover (4310000240). (Refer to 1 of “Disassembly of Double Bill Detection Section”)
2. Separate the cassette (7430002494) and disassemble the cable on the inside.
3. Remove a screw (4650000132, ①) and disassemble the gear (②)
4. Disassemble ASSY GEAR (③).

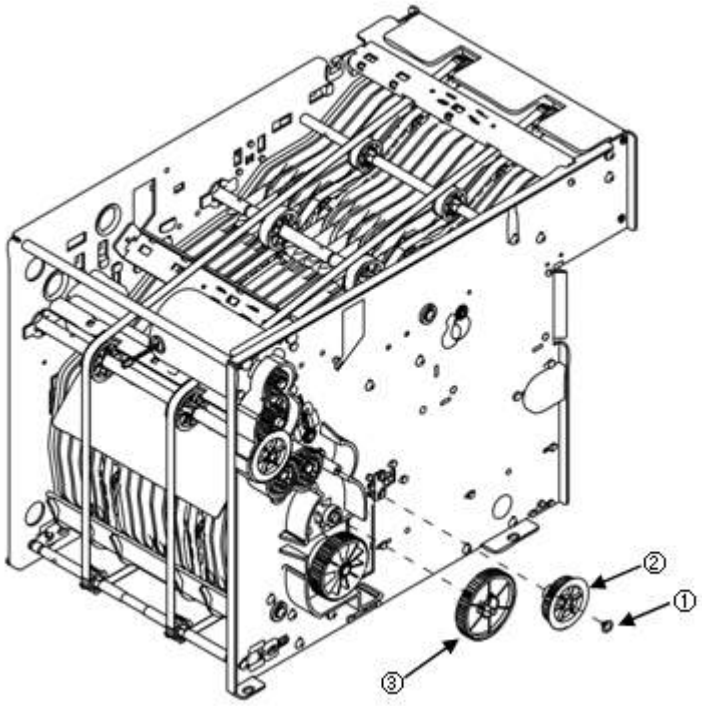


5. Remove a screw (4650000132, ④) and disassemble Assy Clutch (7310000687) in the direction of arrow.

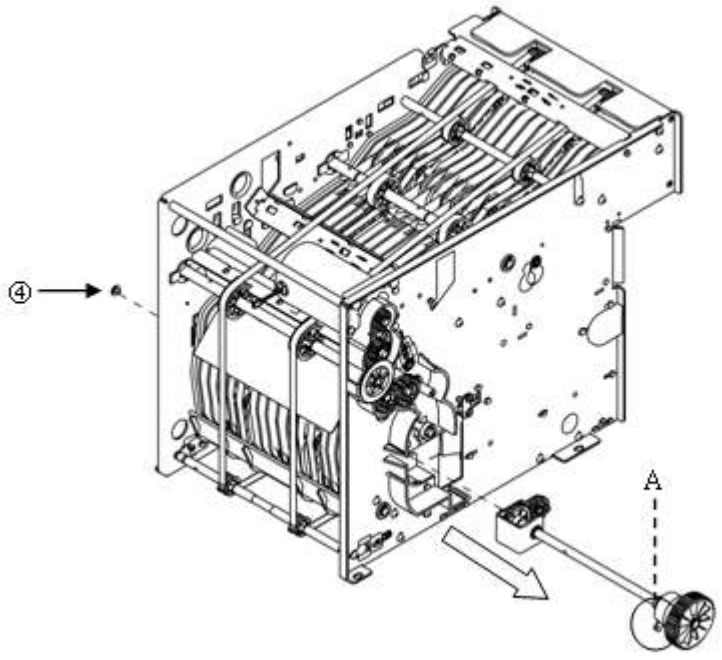



© **Nautilus Hyosung, Inc.** All Rights Reserved.

**<Note!>** Be careful not to damage section A of above figure during disassembling.

6. Unfasten the Set Screw as shown in figure (⑤) and disassemble the clutch (5637000013). (Please use the hexagon wrench during disassembling.)

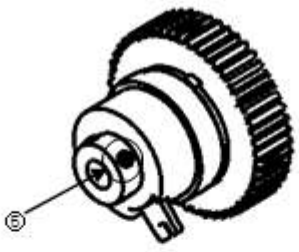


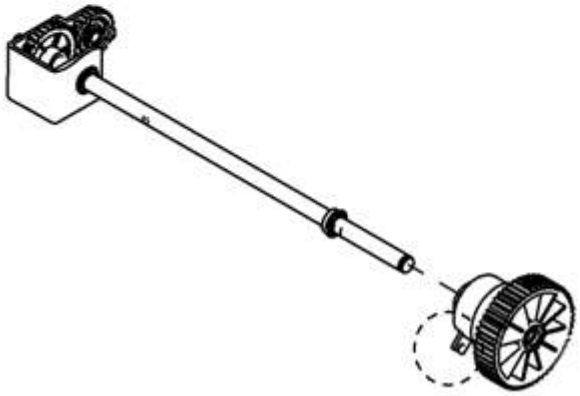

7. To assemble again, use the reverse order of disassembling.

**<Note!>** Apply the Loctite 242 on the screw thread before assembling Set Screw.


© **Nautilus Hyosung, Inc.** All Rights Reserved.

## PCBA Disassembly (7670000055)

► PCBA Disassembly

1. Disassemble the main cover (4310000240). (Refer to 1 of “Disassembly of Double Bill Detection Section)
2. Disassemble CABLE ASSY [① SENSOR (320500143) / ② CLUTCH MOTOR (3205000142)]
3. Remove 2 screws (44651302, ③) and disassemble PCBA (7670000055).

**<Note!>** Be careful not to damage Section A on the upper part when detaching PCBA.

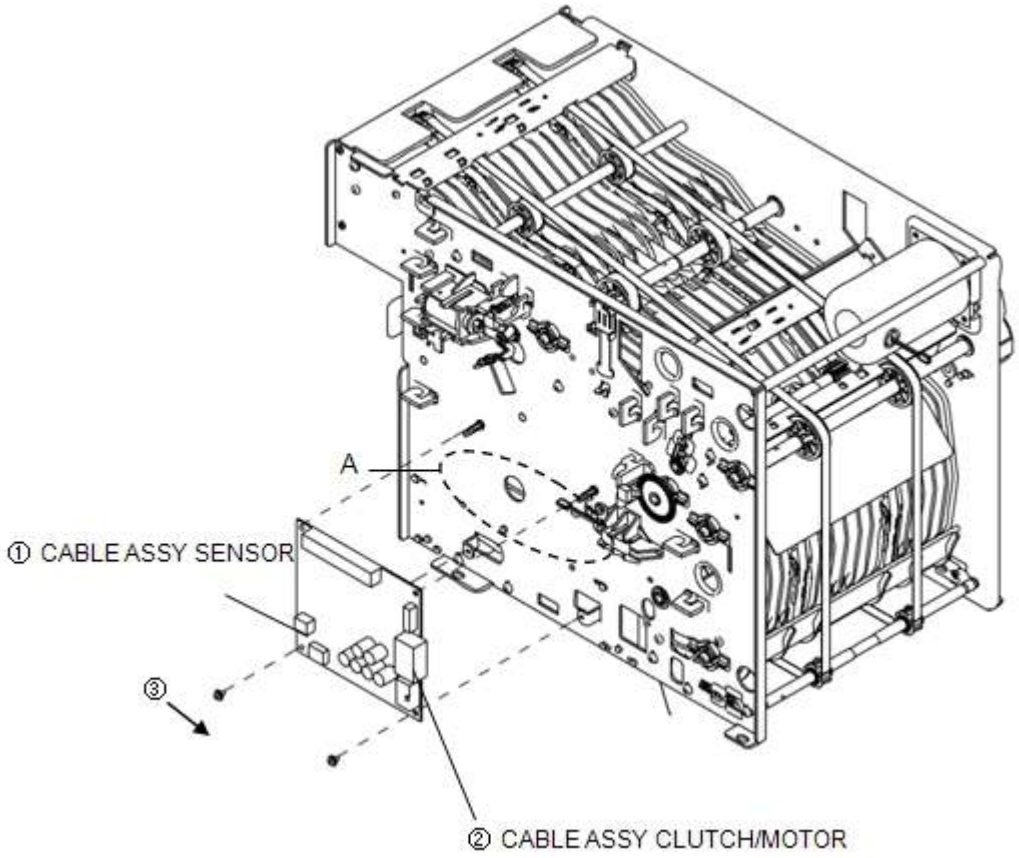


4. To assemble again, use the reverse order of disassembly.


© **Nautilus Hyosung, Inc.** All Rights Reserved.

# Preventive Maintenance

## Lubrication

### Lubrication Standard

► General Information of Lubrication Standard

1. Lubricate the part instructed in the drawing and follow the lubrication standard for lubrication type of each part and its amount.
2. Description of symbol for lubrication amount

| Symbol | Description | Remark |
|---|---|---|
| G | Lubricate slightly with grease using the brush below number 10. (Remove an unnecessary piece of oil.) | |

**<Note!>** Grease 0.1g is equivalent to about 1.2mm squeezed by grease gun whose inlet is 7mm in diameter.

3. The type of lubricant

| Type | Name | Remark |
|---|---|---|
| Grease(G1) | G-501 (White) | |
| Grease(G2) | ALVANIA EP#1 (Yellow) | |


© **Nautilus Hyosung, Inc.** All Rights Reserved.

## Lubrication Standard for each part

► Lubrication Standard for each part

| Part | P/N | Description | Point | Type |
|---|---|---|---|---|
| A | 4590000977 | SPRING:GATE_SOLENOID | 1 place | G1 |
| B | 4590000886 | SPRING:CO-OD35ID45N15 | 4 places | G1 |
| C | | | | |
| D | 4140002186 | K-ASSY:FRAME_L | 1 place | G2 |
| | 4140002187 | K-ASSY:FRAME_R | 1 place | G2 |

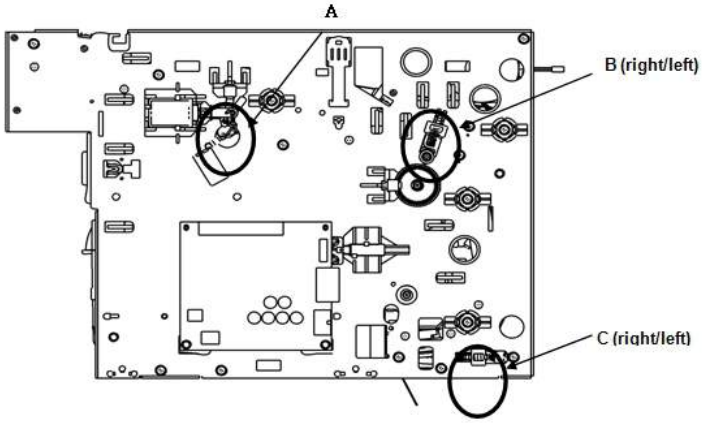


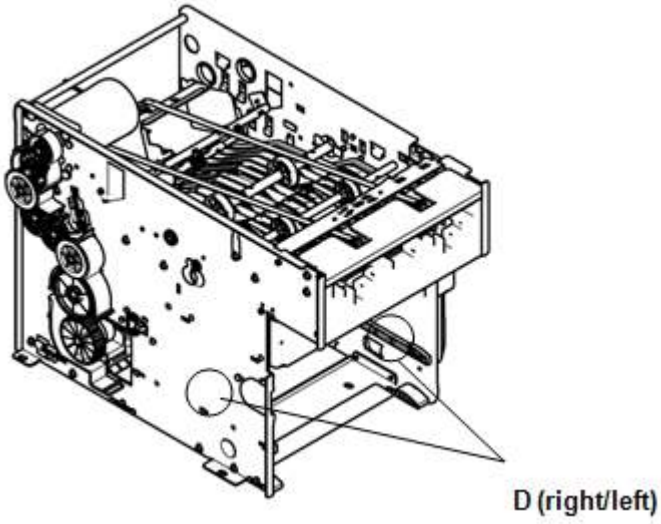



© **Nautilus Hyosung, Inc.** All Rights Reserved.

# Cleaning (Inspection)

## Overview of Cleaning Standard

► This standard expresses the item for regular cleaning (Inspection)

## Cleaning Cycle

► Cycle of regular cleaning (Inspection)

| Symbol | Description |
|---|---|
| M6 | Inspection once a six months |
| Y1 | Inspection once a year (Including M6) |

## Cleaning Point and Method

► Sensor (Prism)

1. Remove the foreign substance from the integral transmissive sensor (CS3, CS8) with a small brush for cleaning sensor. (4~6 times a round-trip of brush)
2. Remove the foreign substance from the prism surface of separated transmissive sensor (CS1,CS13,CS4) with a cotton swab.

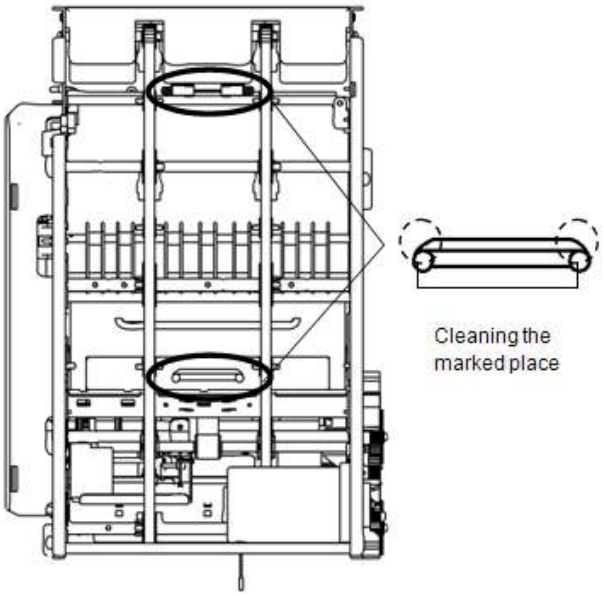


| No | Cleaning Point | P/N | Cleaning Cycle | Cleaning Method | Remark |
|---|---|---|---|---|---|
| 1 | Prism | 4500000436 | M6 | Cotton Swab | |


© **Nautilus Hyosung, Inc.** All Rights Reserved.

► Transport Path

Remove the foreign substances form the transport path with an air brush.

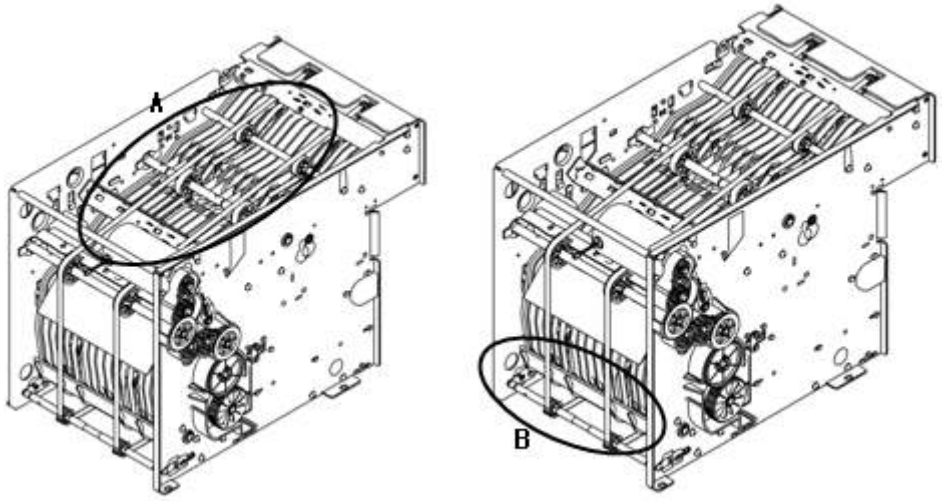


| No | Cleaning Point | P/N | Cleaning Cycle | Cleaning Method | Remark |
|---|---|---|---|---|---|
| 1 | MAIN FEED (A) | 4500000586 | M6 | AIR BRUSH | |
| 2 | LOWER FEED (B) | 4360000532 | M6 | AIR BRUSH | |

► Double Bill Detection Lever

1. Remove the foreign substances from the double bill detection lever with a air brush.

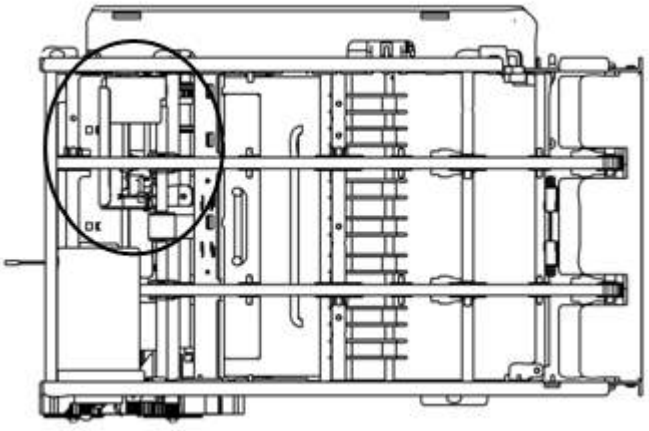

| No | Cleaning Point | P/N | Cleaning Cycle | Cleaning Method | Remark |
|---|---|---|---|---|---|
| 1 | Double Bill Detection Section of the Transport Path | 7310000682 | M6 | AIR BRUSH | |


© **Nautilus Hyosung, Inc.** All Rights Reserved.

# Parts Replacement

## Required Tools for Replacement

► Required Tools

| NO | Name of Tool | Picture |
|---|---|---|
| 1 | + Driver |  |
| 2 | - Driver |  |
| 3 | Number 1.5 + Driver |  |
| 4 | E-LING CLIP |  |
| 5 | LONG NOSE |  |
| 6 | Spring Hook or Pincette |  |
| 7 | Hexagon Wrench |  |


© **Nautilus Hyosung, Inc.** All Rights Reserved.

## How to Replace

► Mounting Catch [Section A] in case of RJ Catch Damage

1. Mount the cassette catch. After removing damaged RJ Catch Section (①), mount a Catch (45353401, ②).

**<Note!>** Assemble 2 screws (M2.5X8 44650701).

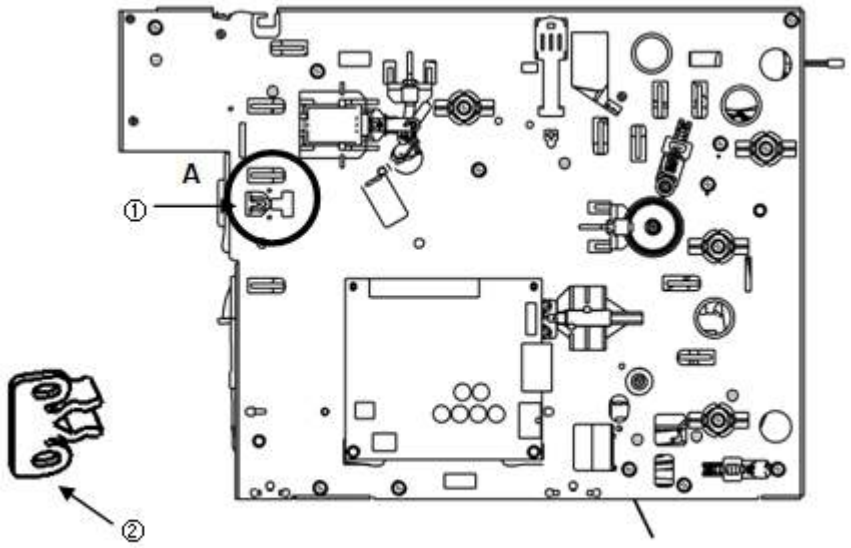


► Mounting Catch [Section B] in case of Cassette Catch Damage

1. Unfasten a screw (M2.5X8 44650701) in case of damage and remove the damaged Catch. Then replace it with new one (45353401).

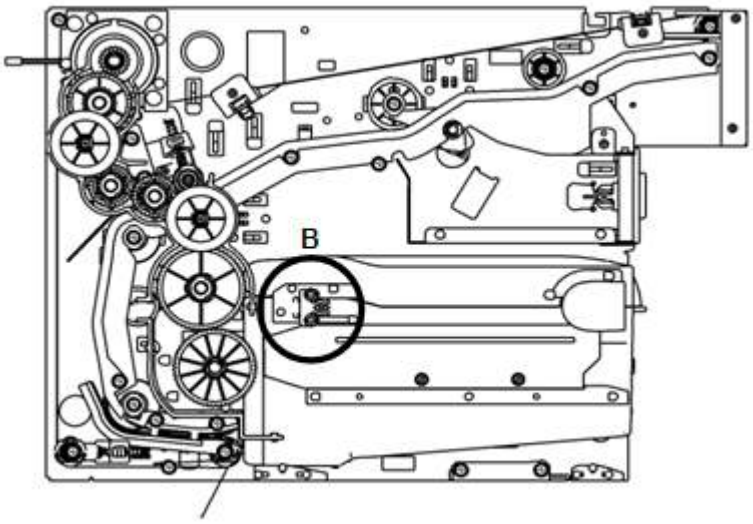



© **Nautilus Hyosung, Inc.** All Rights Reserved.

# .Troubleshooting

► How to remove a jam

Take out the jammed note pulling the belt as shown in below picture.

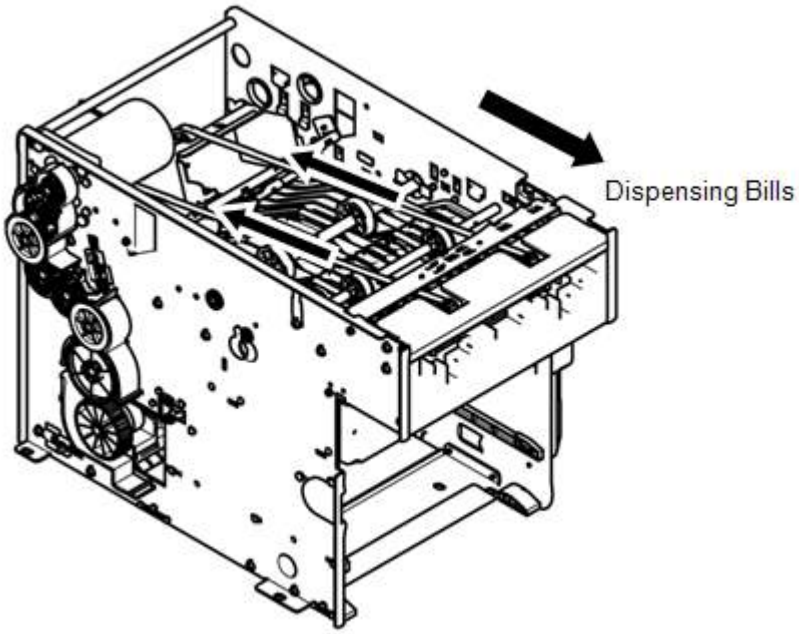



© **Nautilus Hyosung, Inc.** All Rights Reserved.

# Optional Cash Dispenser Unit: CDU-M

## Appearance/Functional Diagram

► The following figures show the three sectional diagrams of the CDU. CDU is 623.00mm (24.53inch) high and 303.00 mm (11.93inch) wide.

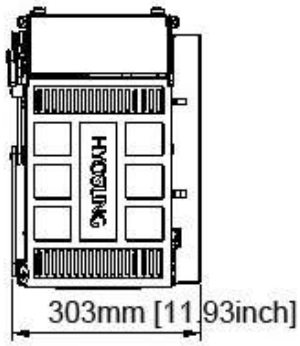


Plane View

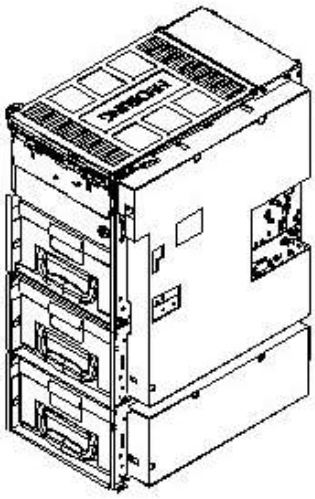

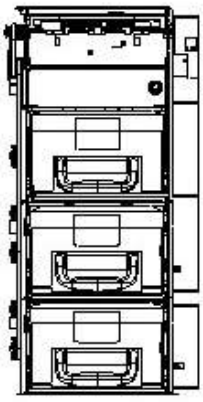

Front View

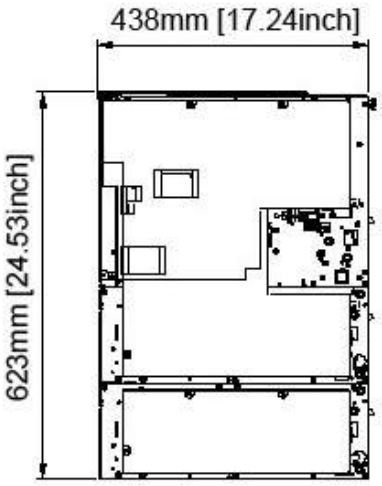


Side View (Right)


© **Nautilus Hyosung, Inc.** All Rights Reserved.

## Cassette

► The following figures show three sectional diagrams of the cassette. Cassette is 137.50mm (5.41inch) high, 217.00mm (8.54inch) wide and 342mm (13.46inch) long.

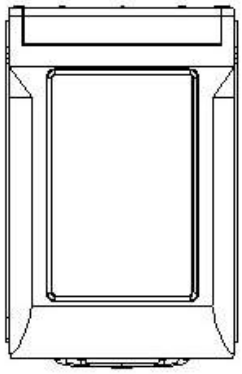

Plane View

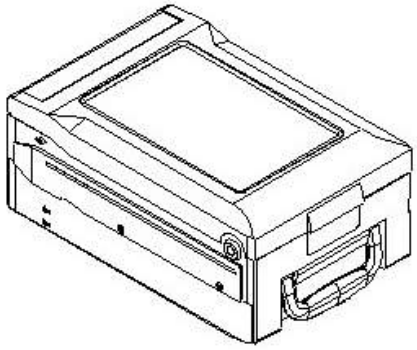

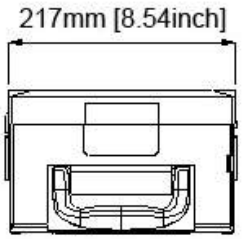


Front View

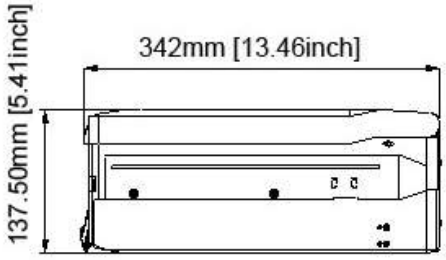


Side View (Right)


© **Nautilus Hyosung, Inc.** All Rights Reserved.

## Actuator Diagram

► Six actuators are used. The following figure shows their location.

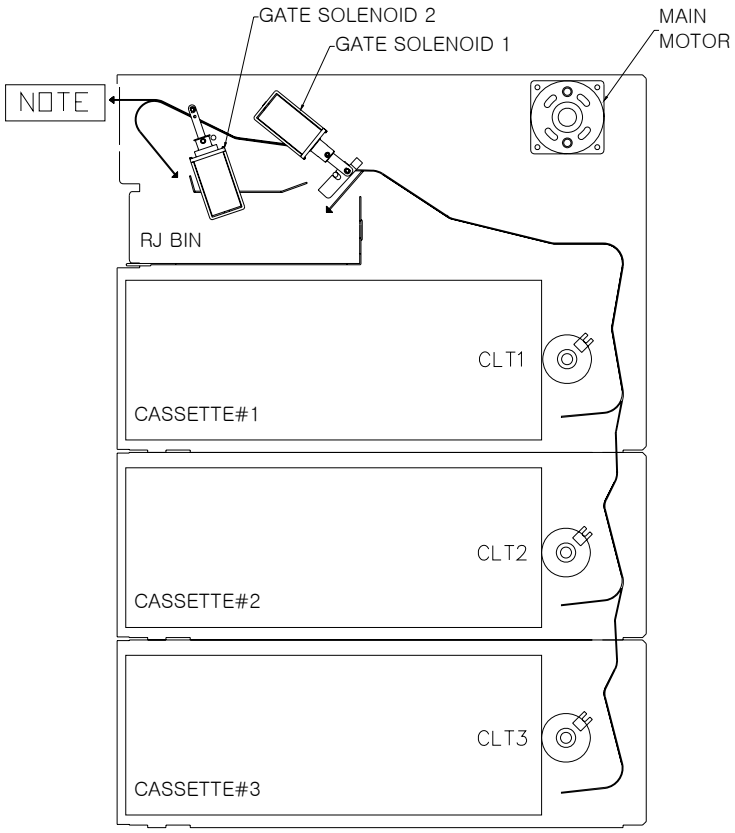



© **Nautilus Hyosung, Inc.** All Rights Reserved.

## Sensor Diagram

► The following figure shows the location of 29 sensors in this system.

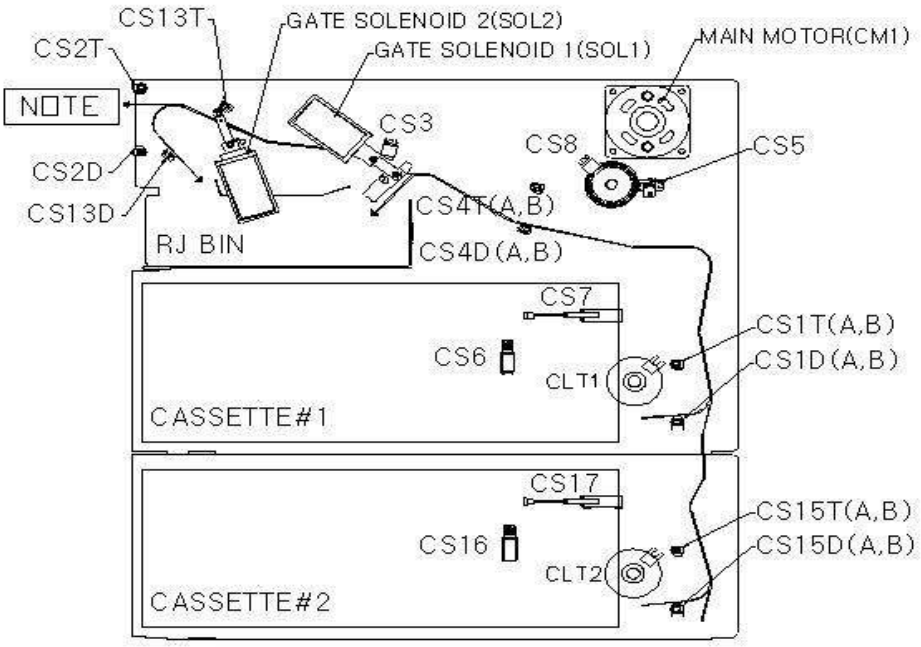


**<Note!> A = Sensor far from the board.**
**B = Sensor close to the board.**

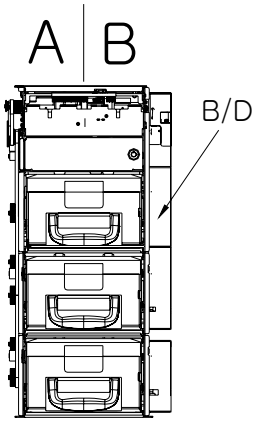


Front View


© **Nautilus Hyosung, Inc.** All Rights Reserved.

## Module and Sensor Replacement

### Sensor Replacement

► Turn the power off and remove the CDU cover as shown in the figure to replace sensors and modules. The CDU contains a total of 28 sensors including 20 returning path sensors, 1 gate operation detection sensor, 3 cassette position detection sensors, 3 remaining note detection sensors and 1 encoder sensor.

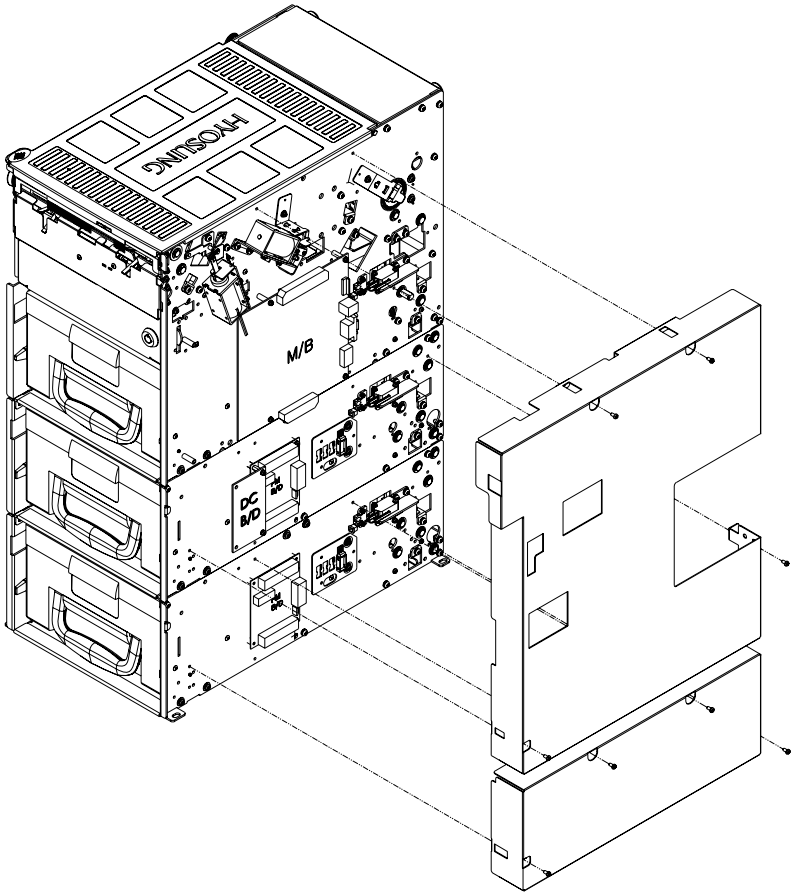



© **Nautilus Hyosung, Inc.** All Rights Reserved.

► Returning Path Sensor

1) CS1D(A,B), CS15D(A,B), CS31D(A,B)

1. Remove the sensor bracket M4 screws (2 places each) as shown in the figure below.
2. Remove the connector and the cable tie to remove the sensor bracket. Be careful not to break the connector pin when removing.
3. Remove the sensor bracket.
4. From the removed sensor bracket, remove the M3 sensor screws (1 place each) of the sensor which will be replaced.
5. Replace the sensor.
6. Assemble the unit in the reverse order - 4~1.

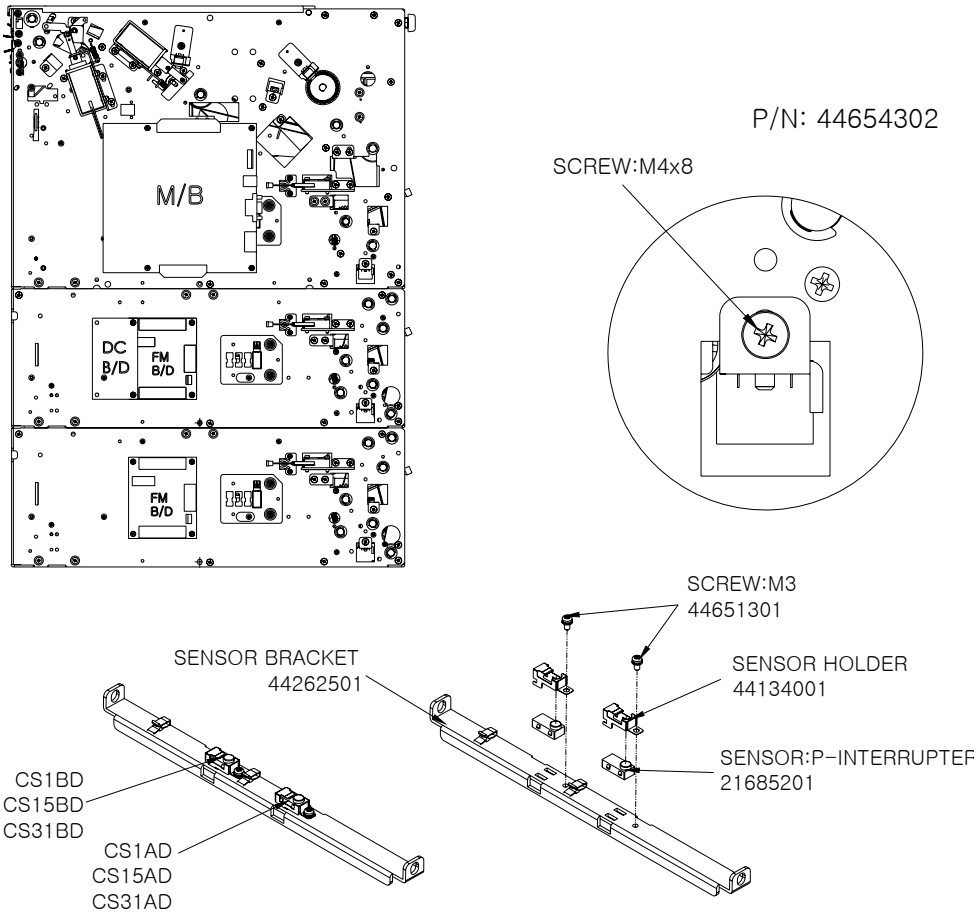



© **Nautilus Hyosung, Inc.** All Rights Reserved.

2) CS1T(A,B), CS15T(A,B), CS31T(A,B)

1. Remove the sensor bracket M4 screws (2 places each) from the sensor bracket.
2. Remove the connector and the cable tie to remove the sensor bracket. Be careful not to break the connector pin when removing.
3. Remove the sensor bracket.
4. From the removed sensor bracket, remove the M3 sensor screws (1 place each) of the sensor which will be replaced.
5. Replace the sensor.
6. Assemble the unit in the reverse order - 4~2.

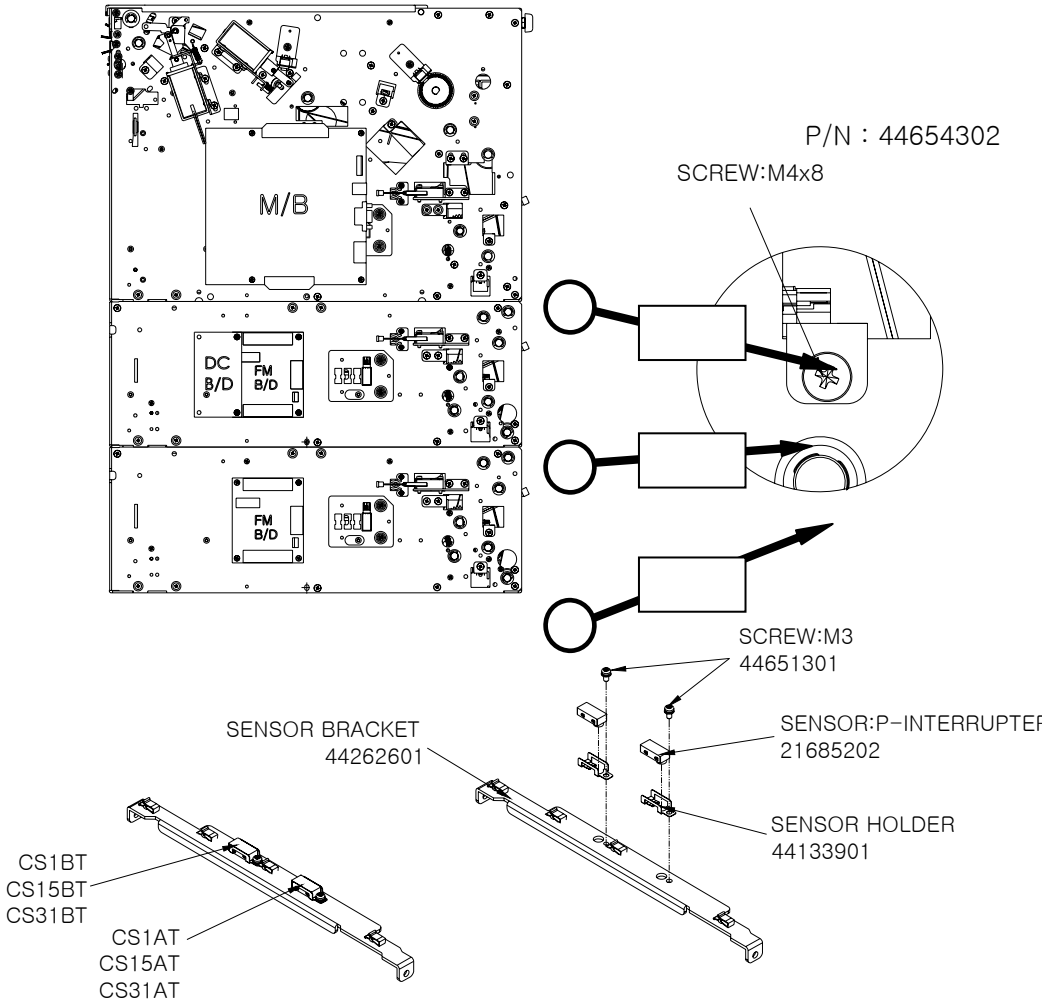



© **Nautilus Hyosung, Inc.** All Rights Reserved.

3) CS2D

1. Remove the M3 screws (4 places) of the sensor bracket.
2. Remove the connector and the cable tie to remove the sensor supporter. Be careful not to break the connector pin when removing.
3. Remove the M3 sensor screw (1 place).
4. Remove the M3 sensor fastening screws from the removed sensor bracket.
5. Replace the sensor.
6. Assemble the unit in the reverse order - ④~①. Make sure to fasten the spacer and the screw end is not protruding out to the other side of the bracket.

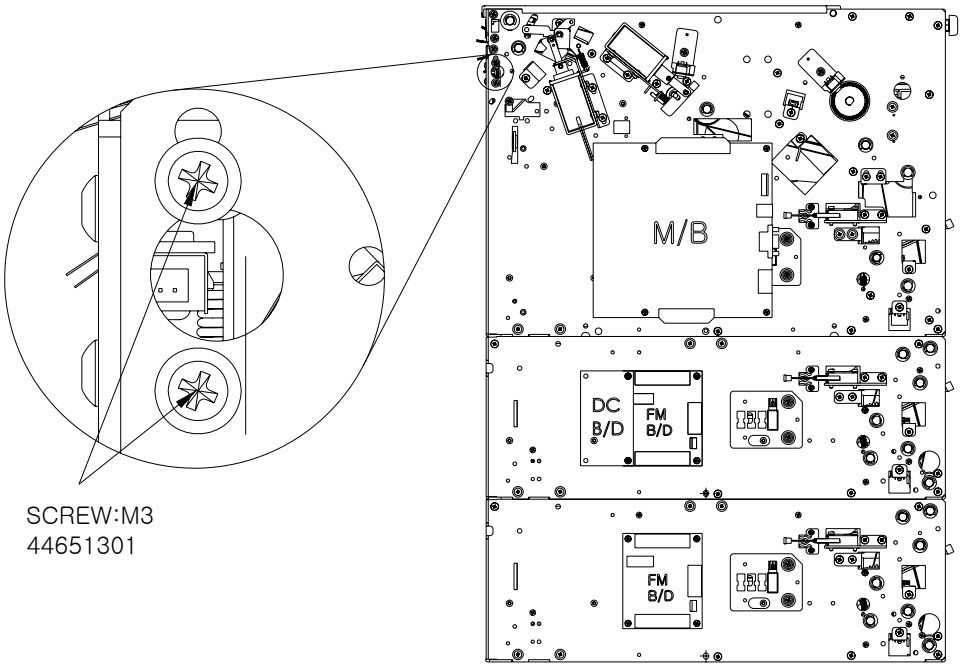


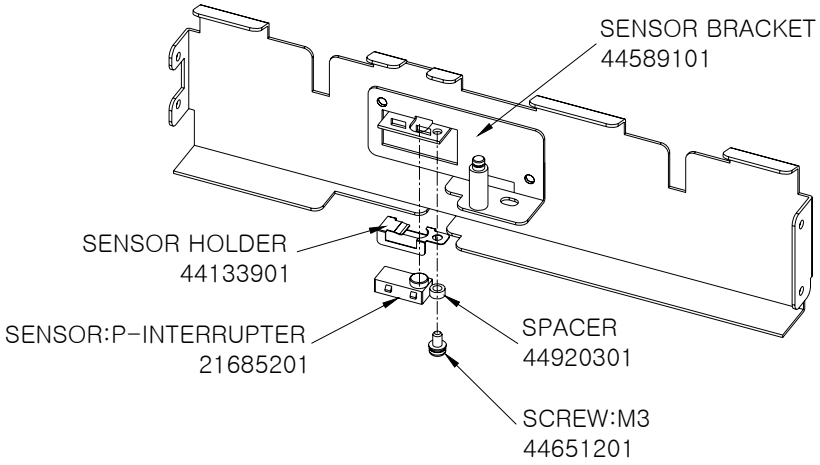



© **Nautilus Hyosung, Inc.** All Rights Reserved.

4) CS2T

1. Remove the M3 screws (4 places) of the sensor bracket.
2. Remove the connector and the cable tie to remove the sensor supporter. Be careful not to break the connector pin when removing.
3. Remove the sensor bracket.
4. Remove the M3 sensor fastening screws from the removed sensor bracket.
5. Replace the sensor.
6. Assemble the unit in the reverse order - 4~1.

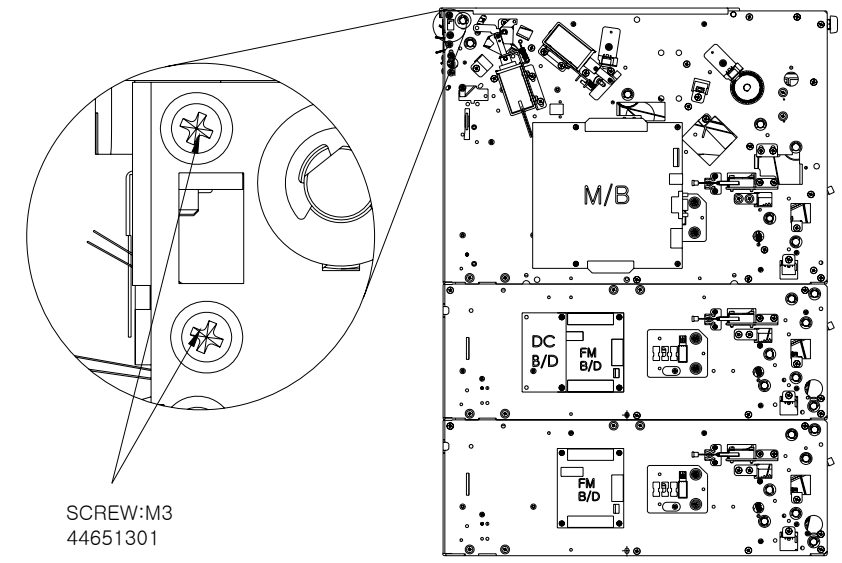


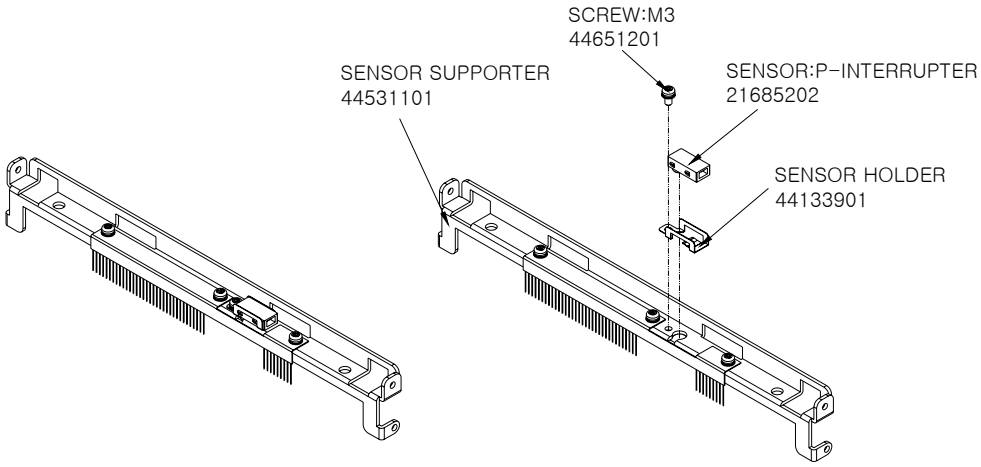



© **Nautilus Hyosung, Inc.** All Rights Reserved.

5) CS4D (A, B)

1. Remove the M3 screws (2 places) of the sensor bracket.
2. Remove the connector and the cable tie to remove the sensor supporter. Be careful not to break the connector pin when removing.
3. Remove the sensor bracket.
4. Remove the M3 sensor fastening screws to replace from the removed sensor bracket.
5. Replace the sensor.
6. Assemble the unit in the reverse order - 4~1. Make sure to fasten the spacer and the screw end is not protruding out to the other side of the bracket.

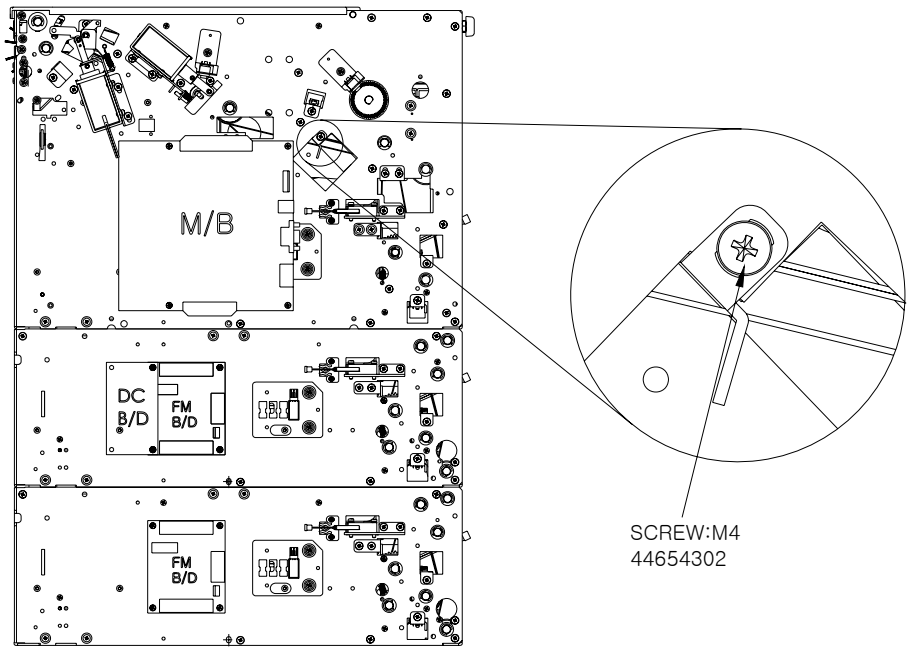


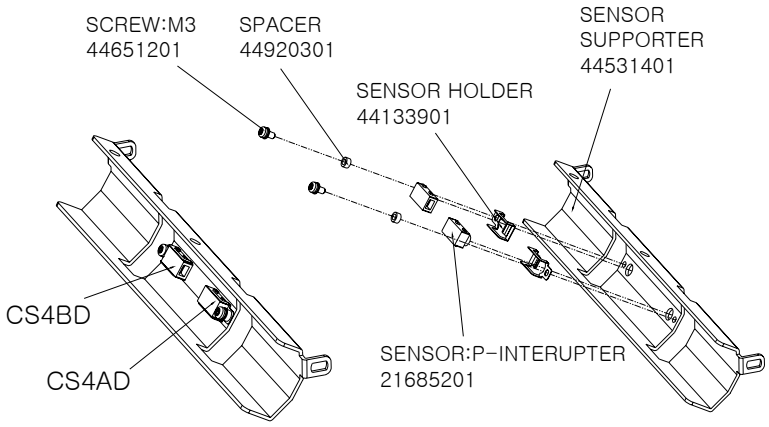



© **Nautilus Hyosung, Inc.** All Rights Reserved.

6) CS4T (A, B)

1. Remove the M3 screws (2 places) of the sensor bracket at the left and right sides.
2. Remove the connector and the cable tie to remove the sensor supporter. Be careful not to break the connector pin when removing.
3. Remove the sensor bracket.
4. Remove the M3 sensor fastening screws of the sensor to replace from the removed sensor bracket.
5. Replace the sensor.
6. Assemble the unit in the reverse order - 4~1.

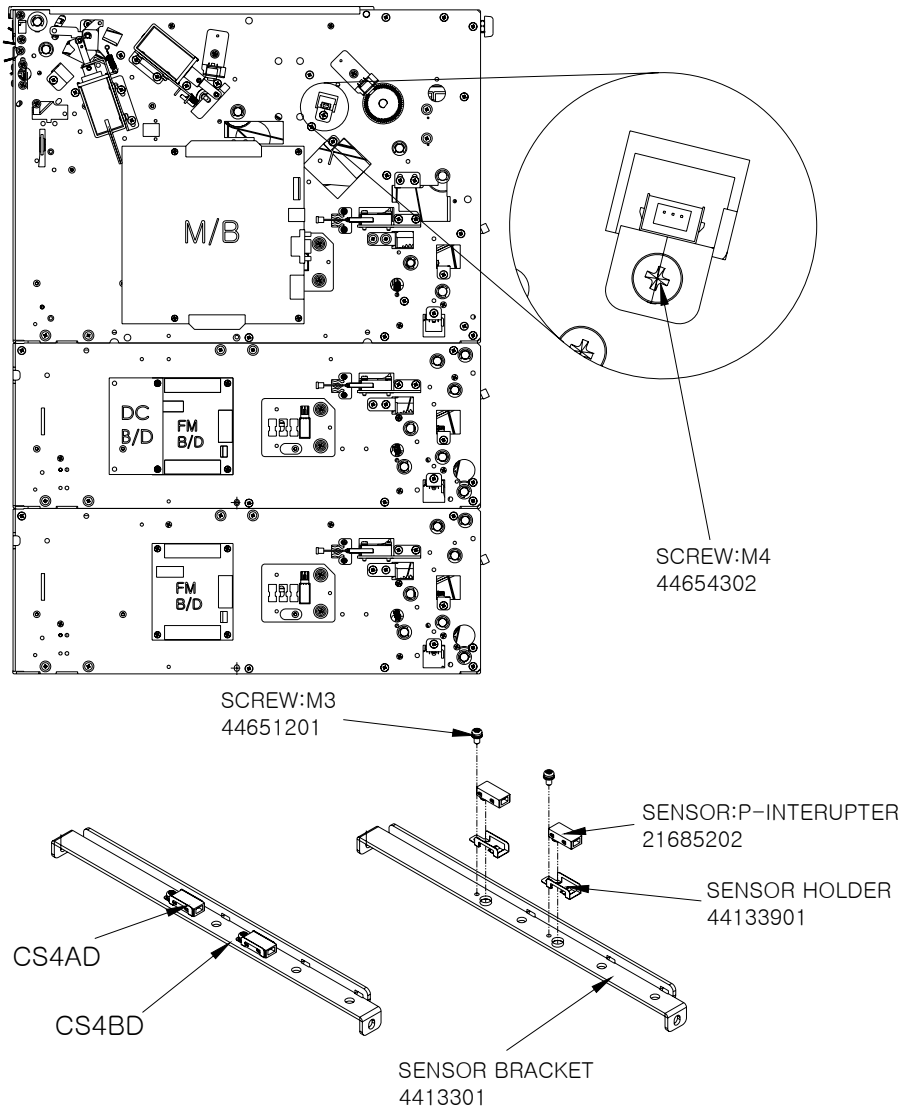



© **Nautilus Hyosung, Inc.** All Rights Reserved.

7) CS13D

1. Remove the M3 screws (4 places) of the sensor bracket.
2. Remove the connector and the cable tie to remove the sensor supporter. Be careful not to break the connector pin when removing.
3. Remove the sensor bracket.
4. Remove the M3 sensor fastening screws to replace from the removed sensor bracket.
5. Replace the sensor.
6. Assemble the unit in the reverse order - 4~1. Make sure to fasten the spacer and the screw end is not protruding out to the other side of the bracket.

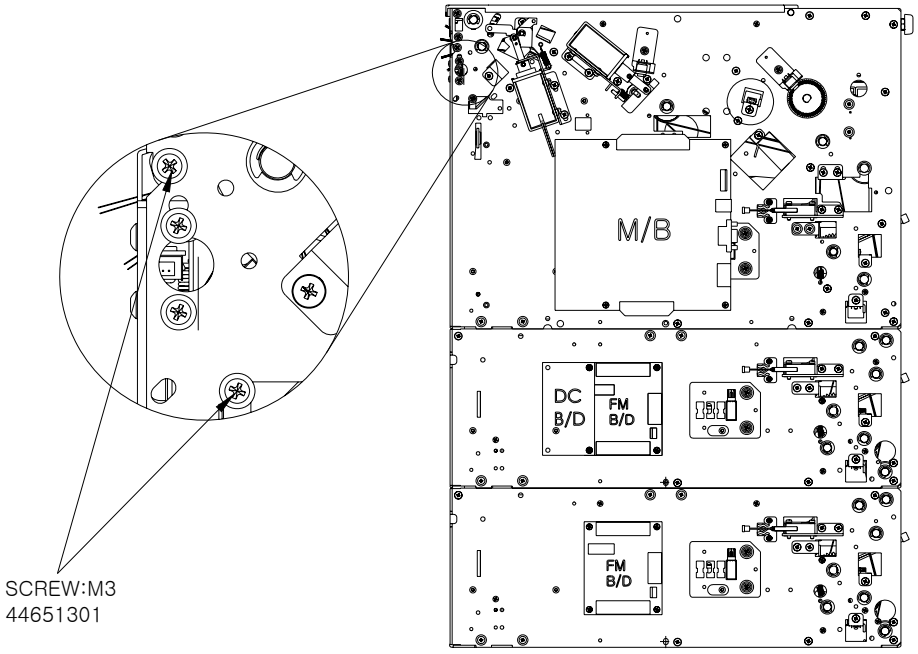


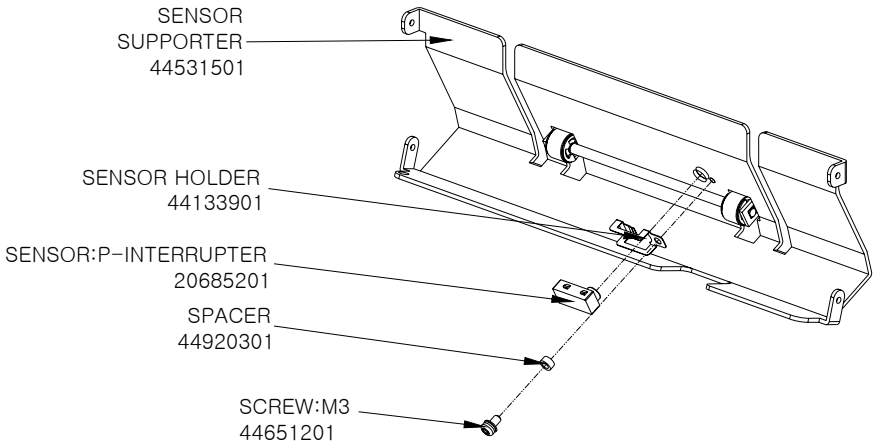



© **Nautilus Hyosung, Inc.** All Rights Reserved.

8) CS13T

1. Remove the M3 screws (1 place) of the sensor bracket.
2. Remove the connector and the cable tie to remove the sensor supporter. Be careful not to break the connector pin when removing.
3. Remove the sensor bracket.
4. Remove the M3 sensor fastening screws from the removed sensor bracket.
5. Replace the sensor.
6. Assemble the unit in the reverse order - 4~1. Make sure to fasten the spacer and the screw end is not protruding out to the other side of the bracket.

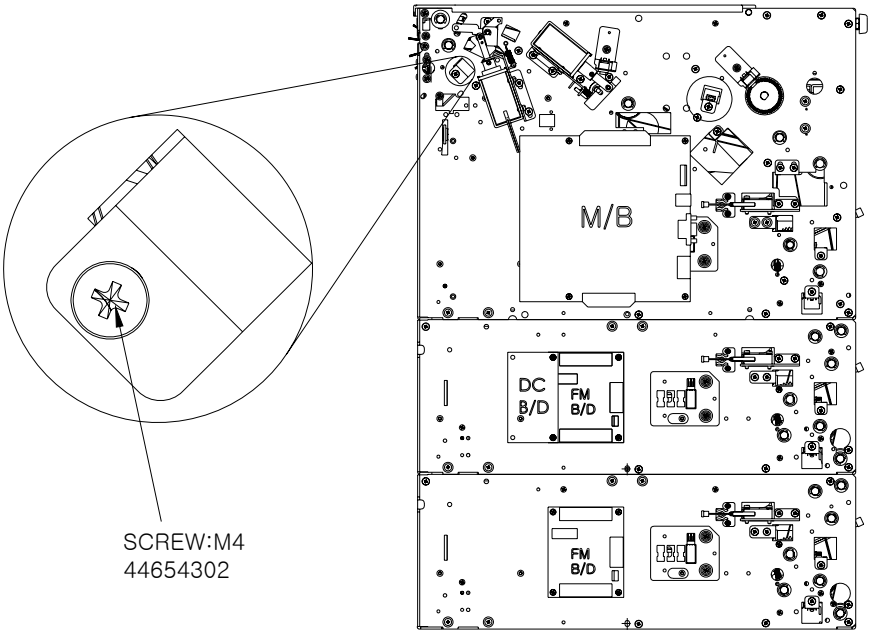


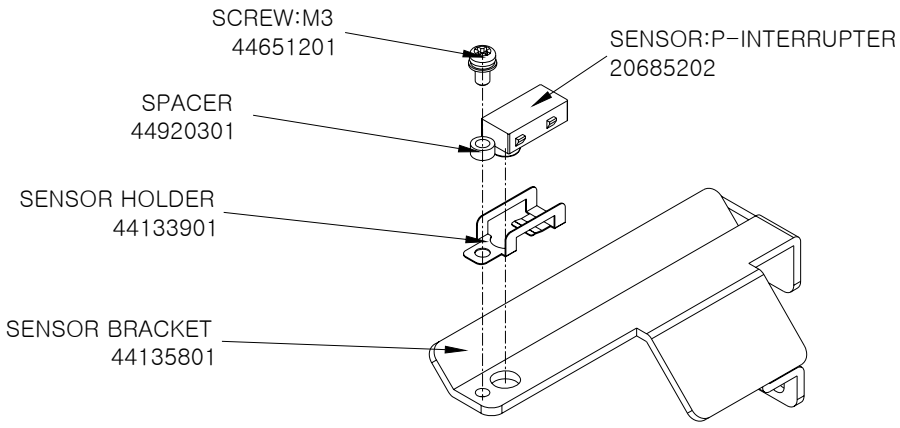



© **Nautilus Hyosung, Inc.** All Rights Reserved.

2) Gate Operation Detection Sensor & Encoder Sensor

(1) CS3

1. Remove the M3 screw of the CS3 sensor bracket (1 place).
2. Remove the connector and the cable tie to remove the sensor bracket. Be careful not to break the connector pin when removing.
3. Press the part ② of the sensor gently as shown in the figure below to remove the lock and the sensor.
4. To insert the sensor, insert the part ① first, then press part ② to lock.
5. Assemble in the reverse order - 3~1.

**<Note!>** When reassembling the CS3, pull the solenoid and adjust the detection bracket to the center of the sensor while the screw is still loose. Then, tighten the screw.

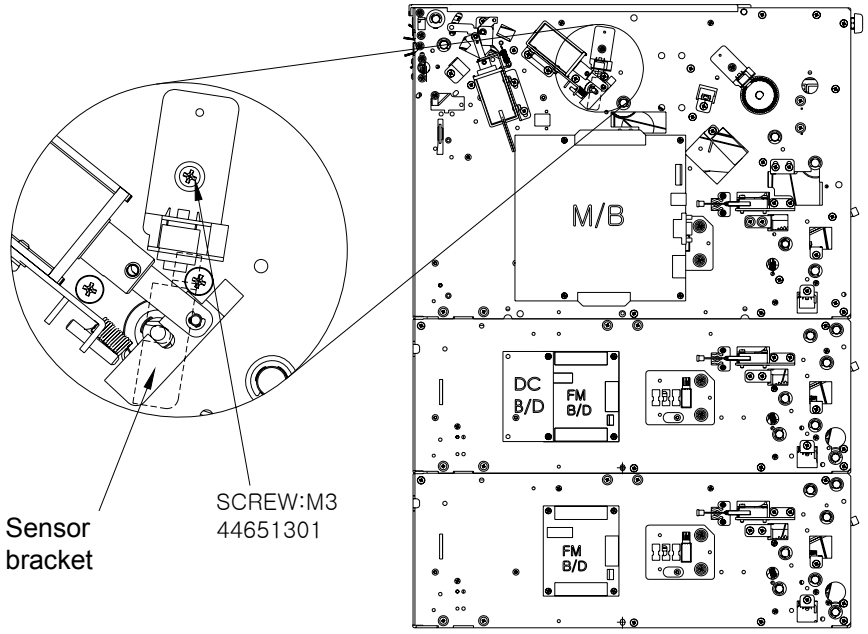


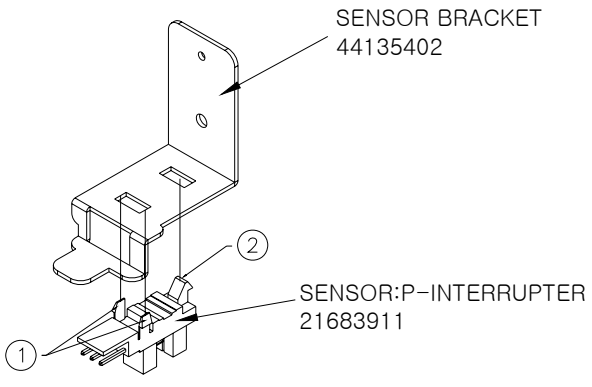



© **Nautilus Hyosung, Inc.** All Rights Reserved.

(2) CS8 (Encoder sensor)

1. Remove the M3 screw of the CS8 sensor bracket (1 place).
2. Remove the connector and the cable toe to remove the sensor bracket. Be careful not to break the connector pin when removing.
3. Press part ② of the sensor gently as shown in the figure below to remove the lock and the sensor.
4. To insert the sensor, insert the part ① first, then press part ② to lock.
5. Assemble in the reverse order - 3~1.

**<Note!>** Make sure that the sensor always faces towards the center of the encoder shaft as shown in the following figure.

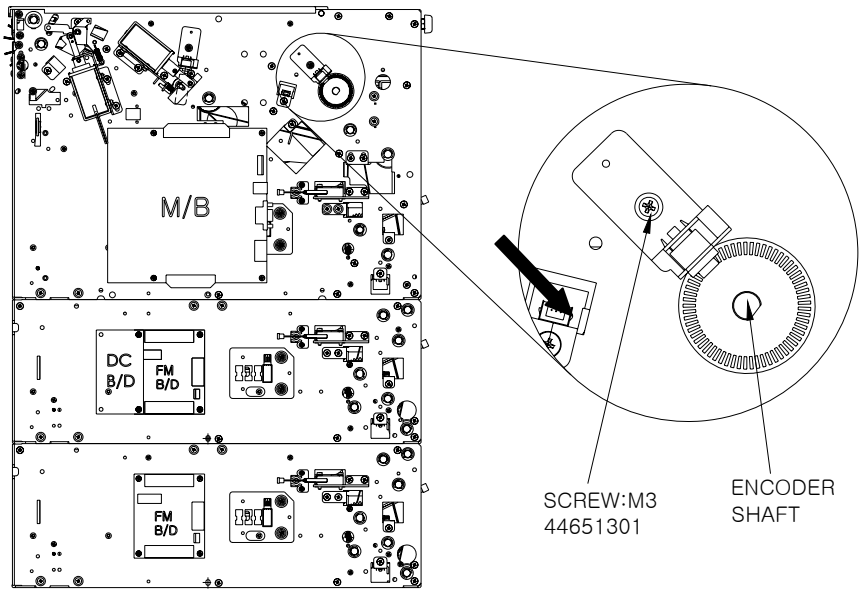


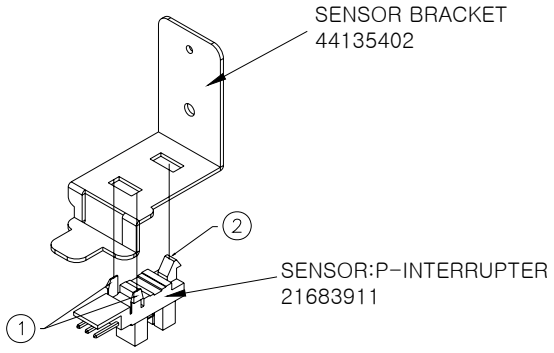



© **Nautilus Hyosung, Inc.** All Rights Reserved.

3) Regular Position Sensor

(1) CS7, CS17, CS27

1. Remove the sensor bracket M4 screws (2 places each).
2. Remove the connector and the cable tie to remove the sensor bracket. Be careful not to break the connector pin when removing.
3. Remove the sensor bracket.
4. Remove the MP3 sensor screws (2 places each) from the removed sensor bracket.
5. Replace the sensor.
6. Assemble the unit in the reverse order - 4~1.

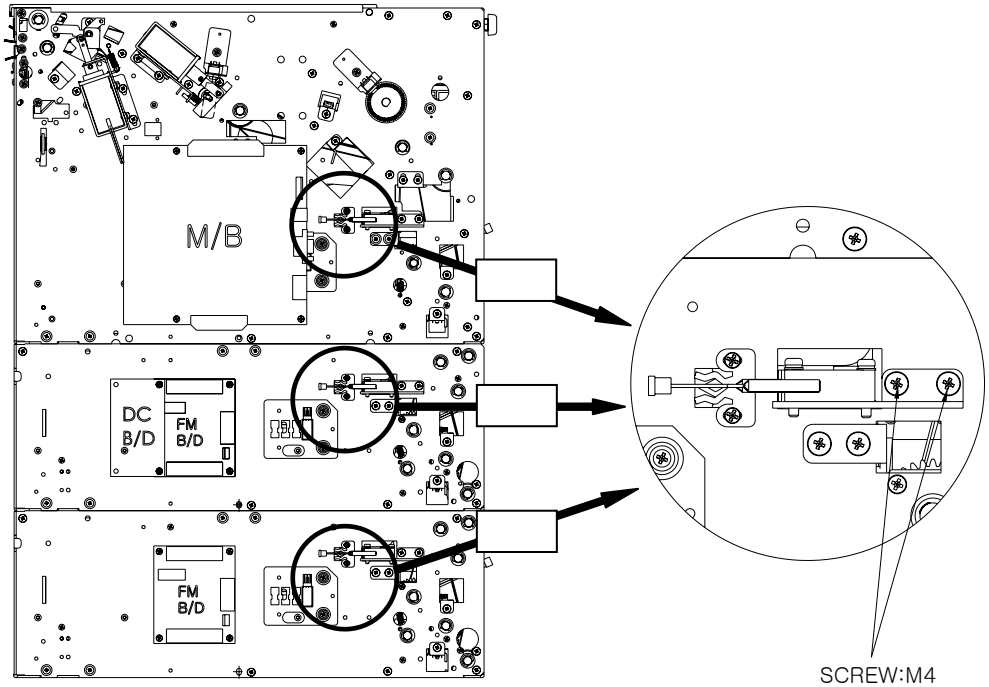


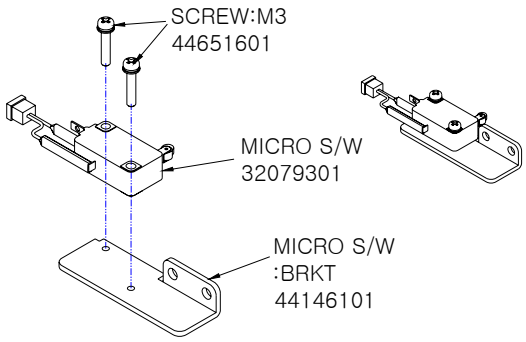


**<Note!>** Adjust the cassette position when mounting it until a click sound is heard.


© **Nautilus Hyosung, Inc.** All Rights Reserved.

4) Remaining Note Sensor

(1) CS6, CS16, CS26

1. Remove the CS6 sensor from the main B/D to replace it. (See the main B/D replacement section)
2. Remove the sensor bracket M3 screws (2 places each).
3. Press the snap lock in the rear of the sensor bracket with your hand and, then remove the sensor
4. Remove the connector. Be careful not to break the connector pin when removing.
5. Replace the sensor.
6. Connect the connector.
7. To assemble the sensor in the bracket, lock it from the front side and press the rear side to fix it.

**<Note!>** Adjust the sensor by running the variable resistance so that it generates a current below 1.0V if there is cash available and above 3.0V if no cash is available.

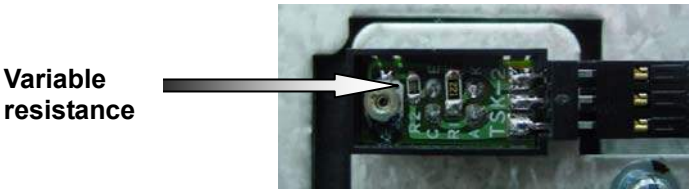


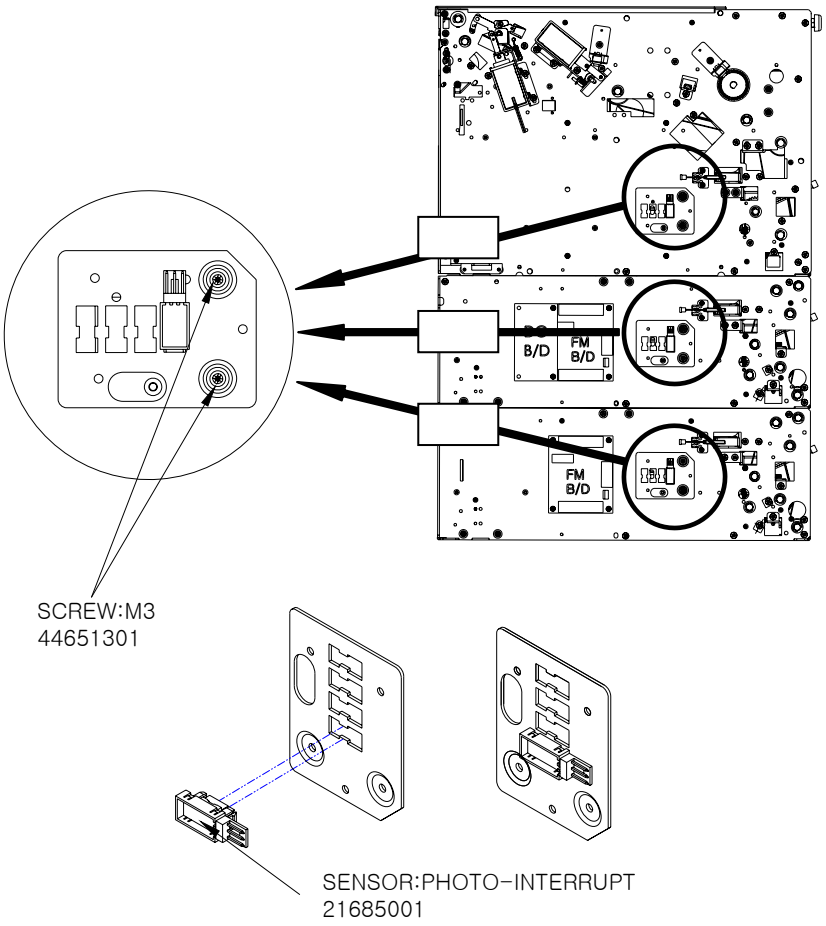



© **Nautilus Hyosung, Inc.** All Rights Reserved.

## Module Replacement

► B/D assembly

1. The board assembly is composed of the main board and the DC converter board as shown in the following figure.
2. Remove the connector from the board. Be careful not to break the connector pin.
3. Remove the board M3 screws (4 places in the main board, 8 places in the FM board (6 screws, 2 jack posts) and 2 places in the DC board).
4. Replace the board.
5. Assemble in the reverse order – 4 ~ 1.

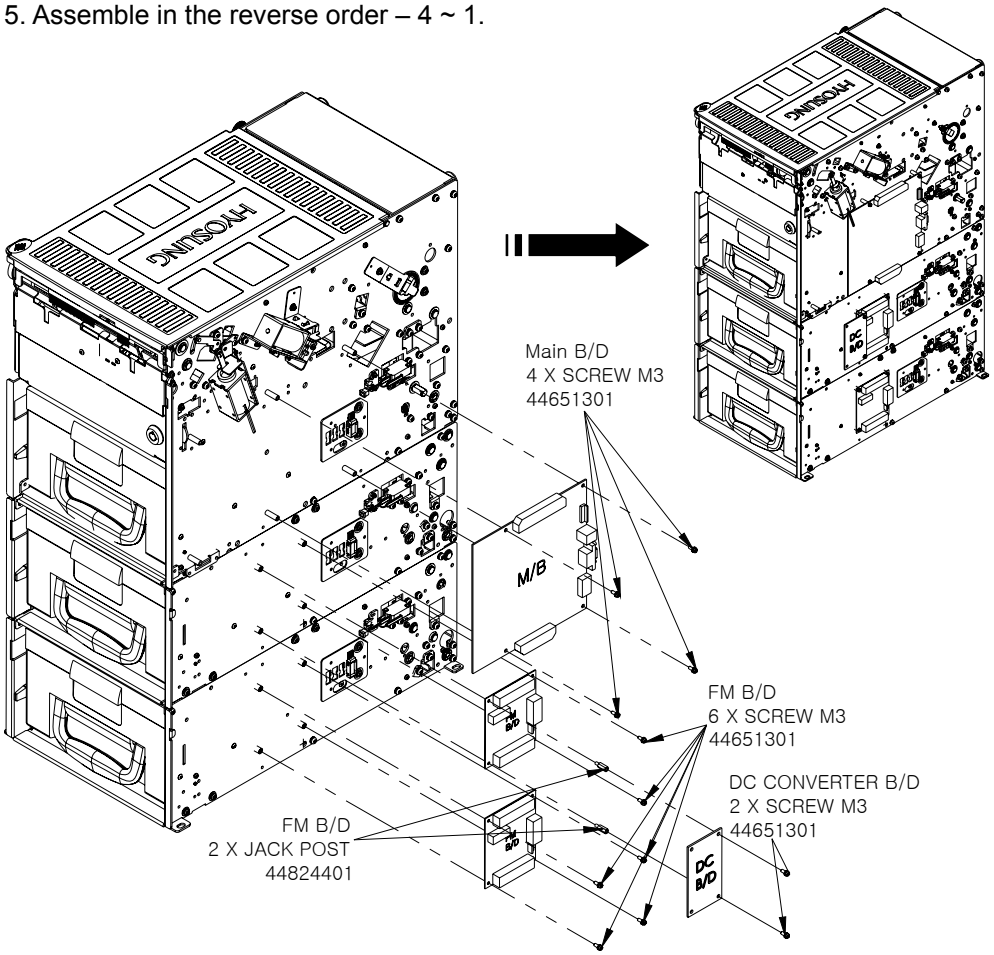



© **Nautilus Hyosung, Inc.** All Rights Reserved.

► Main Motor Assembly

1. Remove the main motor cover as shown in the following figure.
2. Remove the power cable from the main motor.
3. Unscrew the main motor fixing screws (M5, 4 places).
4. Remove the main motor assembly and replace it.
5. Assemble in the reverse order – 4 ~ 1.

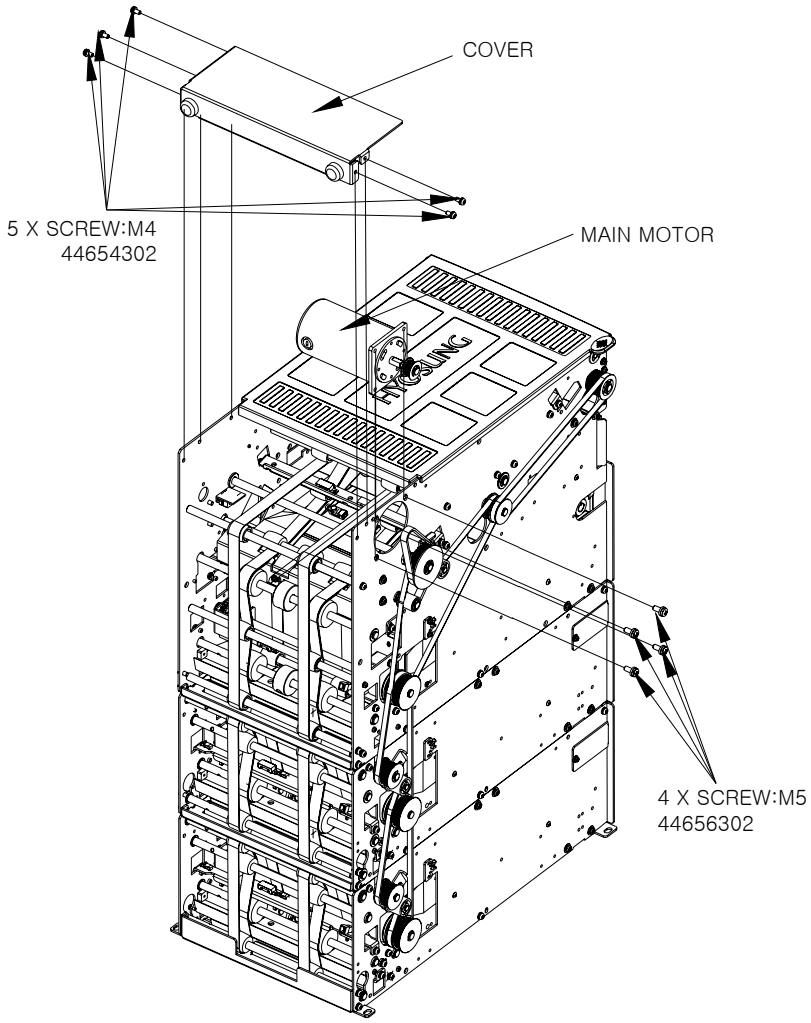



© **Nautilus Hyosung, Inc.** All Rights Reserved.

► Gate Solenoid Assembly

1. Remove the solenoid power cable.
2. Remove the φ 2 E-ring.
3. Unscrew the solenoid bracket screws (M4, 2 places).
4. Unscrew the solenoid fixing screws (M4, 4 places).
5. Assemble in the reverse order – 4 ~1 after replacing a solenoid assembly. Adjust the gate according to the standard.

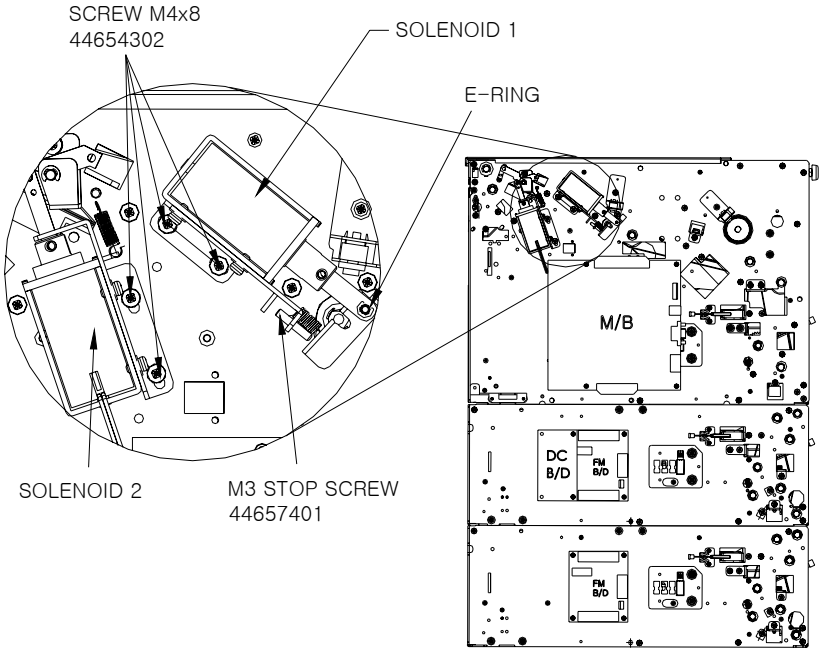


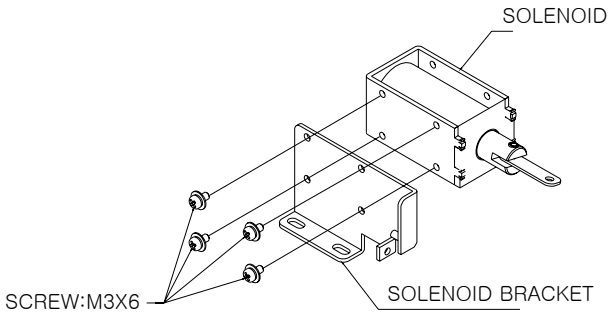



© **Nautilus Hyosung, Inc.** All Rights Reserved.

► Clutch Assembly

1. The clutch assembly is composed of three clutches as shown in the figure below.

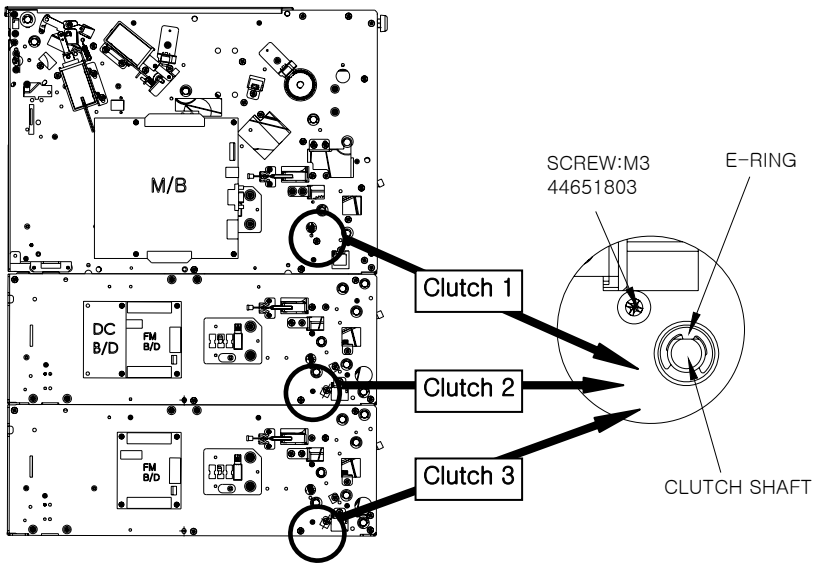


2. Remove the M4 screw (1 pace) and E-Ring to remove the clutch as shown in the above figure. Then, remove the M4 screws (3 places) as shown in the figure below.

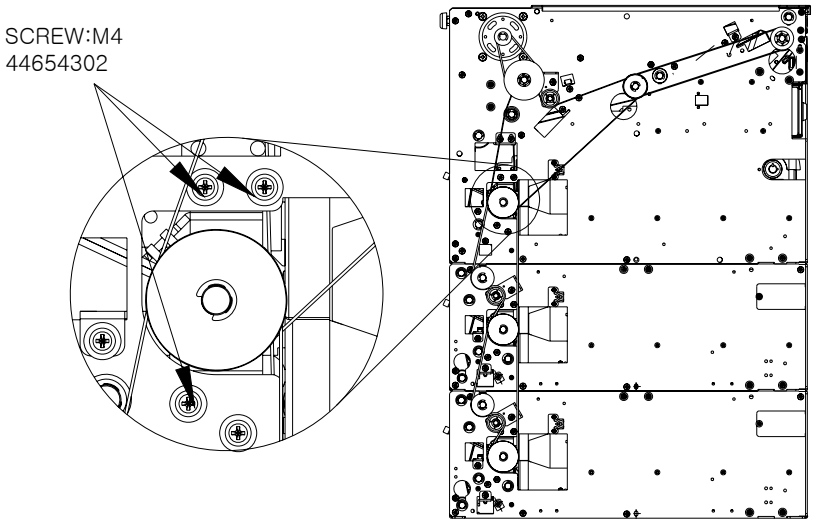



© **Nautilus Hyosung, Inc.** All Rights Reserved.

3. Remove the clutch assembly.

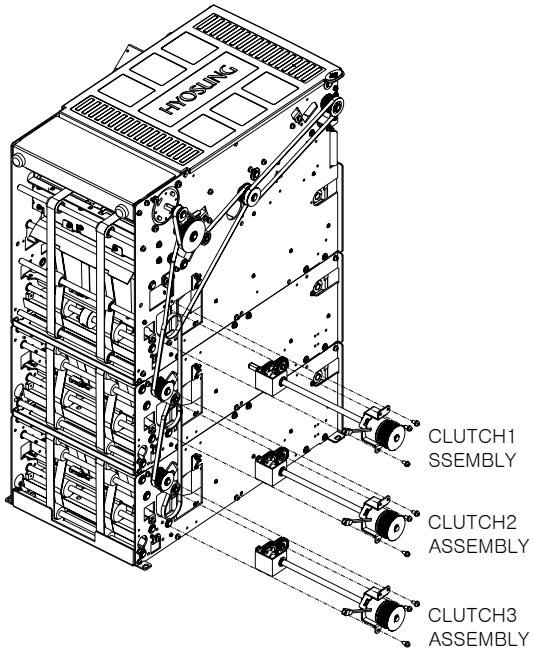


4. Replace the clutch assembly and assemble in the reverse order - 4 ~ 1.

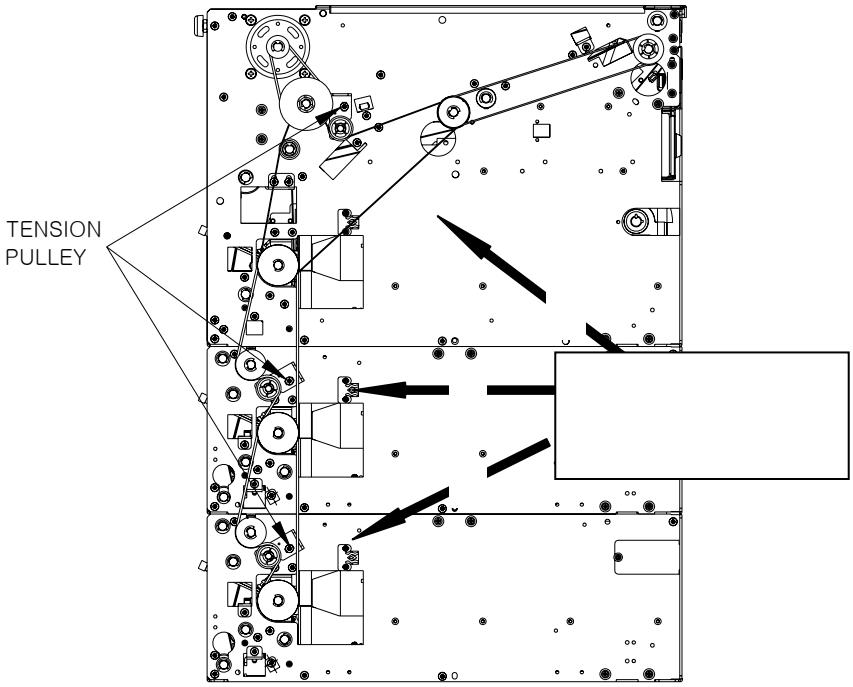


**<Note!>**

When replacing the clutch assembly, adjust the tension pulley so that belt tension is about 100g to the direction and about 200g ~ 300g to the direction when the timing belt is pressed by about 3mm (use the tension gauge).


© **Nautilus Hyosung, Inc.** All Rights Reserved.

## Adjustment Standard

► Gate Adjustment

1. Loosen the solenoid M4 screw (2 places) as much as possible.

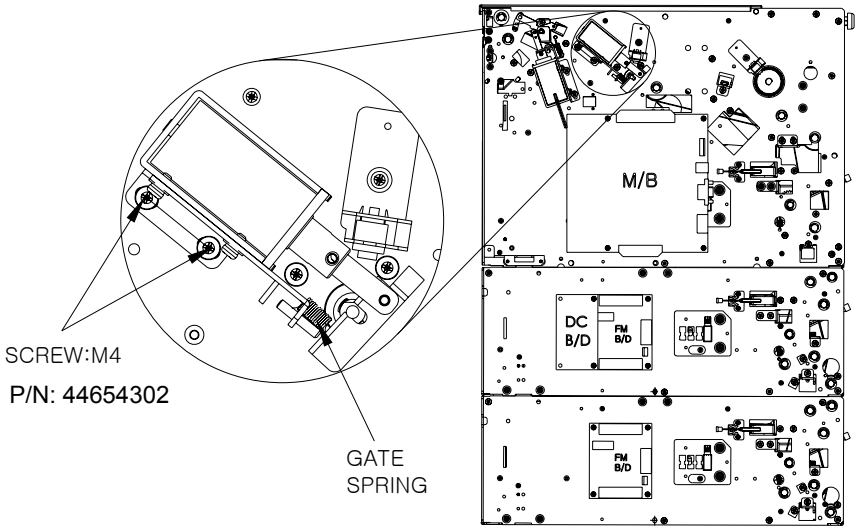


2. Adjust the solenoid position so that the gate is at least 1.5mm away from the shaft when you pull the gate as shown in the below right figure.
3. Adjust the solenoid position so that the gate is 1.5mm away from the shaft, when pulling the gate as shown in the right below figure.

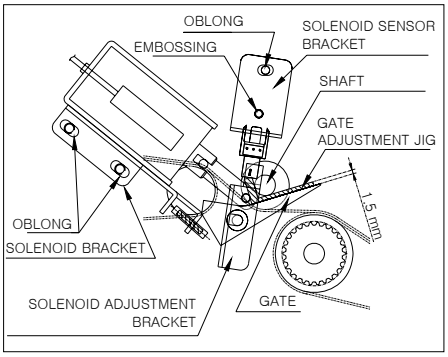


When the gate is pulled

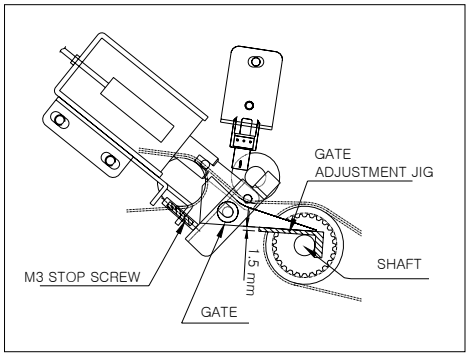


When the gate is released

4. Fix the solenoid M4 screws (2 places).


© **Nautilus Hyosung, Inc.** All Rights Reserved.

►Adjusting Gate2

1. Unscrew the solenoid bracket fixing M4 screws (2 places) by half.
2. Adjust the solenoid position so that the Gate2 is 3-4mm away from the CS3 sensor supporter when you pull the gate as shown in the figure below. Then, fasten the solenoid bracket fixing screws completely.

**<Note!>** Adjust distance between the supporter and Gate2 more than 3mm when the solenoid is released, as shown in the figure below.

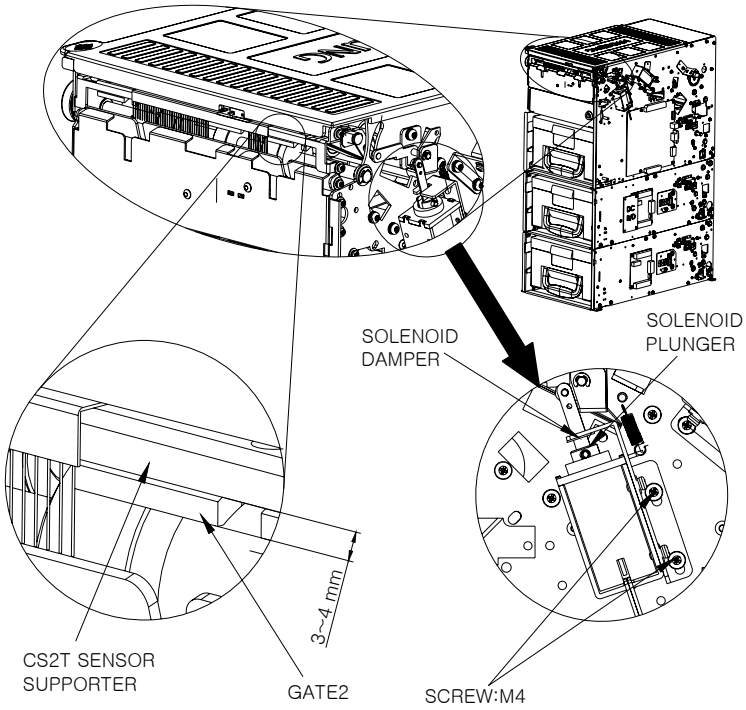


<When Solenoid is Pulled>

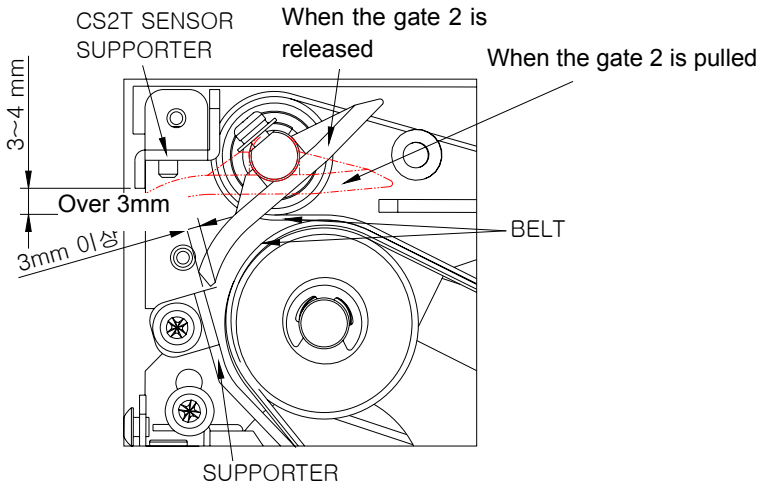


< When Solenoid is Released>


© **Nautilus Hyosung, Inc.** All Rights Reserved.

# Oiling Standard

► Y1: Once a year, Warning: Be careful not to contaminate the belt with lubricant

| Location | Lubricants | Interval | Remark |
|---|---|---|---|
| Tension Pulley | Mobil (1) | Y1 | Lubricate the friction part between the shaft and the pulley |
| Gate bush | Mobil (1) | Y1 | Lubricate the friction part between the bush and the gate shaft (2 places) |
| Gear support gear teeth surface | Albania Grease EP1 | Initial Oiling | - |
| Gate spring hook | Albania Grease EP1 | Initial Oiling | - |
| Gear support spring hook | Albania Grease EP1 | Initial Oiling | - |
| Note separate assembly gear teeth surface | Albania Grease EP1 | Initial Oiling | - |

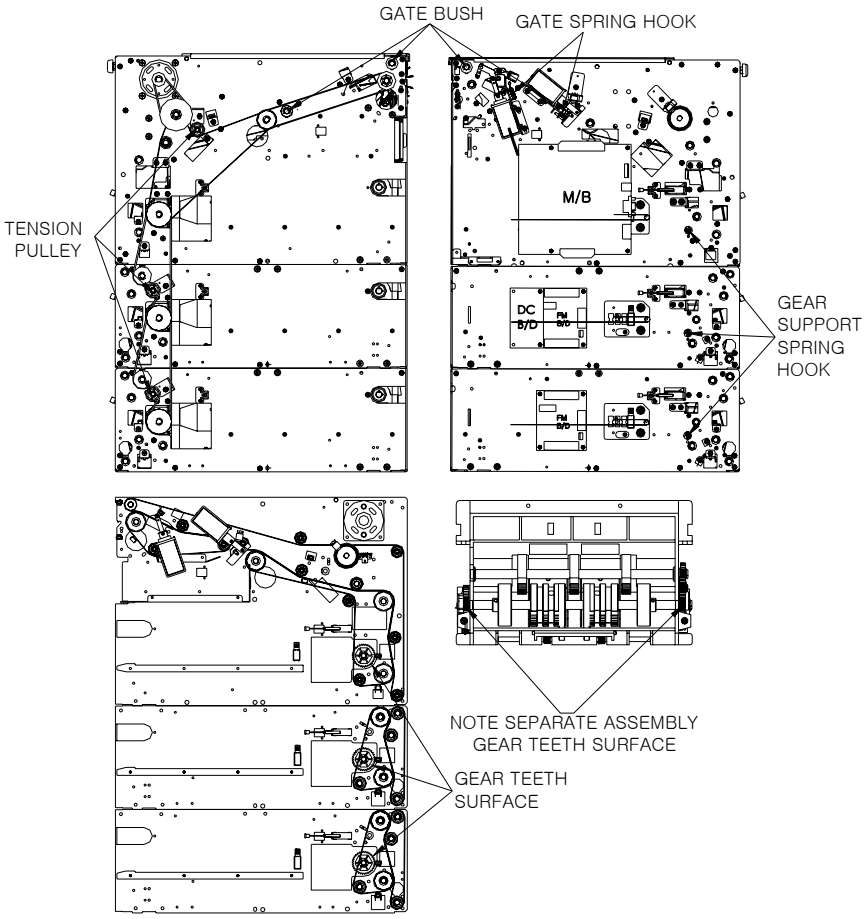



© **Nautilus Hyosung, Inc.** All Rights Reserved.

# Cleaning Standard

► M6: Once every 6 months, M3: Once every 3 months.

| Location | | Int. | Remark |
|---|---|---|---|
| CDU<br>Main Body | CS1(A,B)D,T /<br>CS15(A,B)D,T<br>CS31(A,B)D,T /<br>CS4(A,B)D,T<br>CS2D,T / CS13D,T<br>CS3 / CS8<br>CS7 / CS7 / CS17<br>CS6 / CS16 / CS26<br>Guide entrance | M6 | Remove the foreign objects and dust using a soft brush |
| Note separate ASS'Y | Roller | M3 | Remove the foreign objects and dust using a soft brush |


© **Nautilus Hyosung, Inc.** All Rights Reserved.

# Setting Specifications

► Dip S/W Specifications

1. CN7 (Refer to the cable connection diagram)

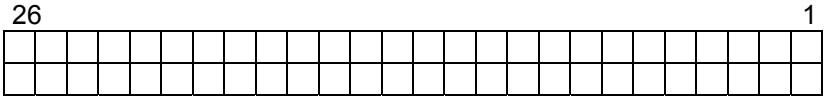


| S1 | Setting | Comments |
|---|---|---|
| #1, #2, #12 | Short | Forced EP Download, Test mode |
| #1, #2 | Short | Test mode |
| #1~#26 | Open | AP mode |

2. CN7 Default setting
   #1~#26 Open

3. FM B/D DIP S/W Specifications

| FM B/D | DIP S/W | Remark |
|---|---|---|
| 2 CASSETTE | #1, #6, #7 : ON | Default |
| 3 CASSETTE | #2, #4, #6 : ON | Default |

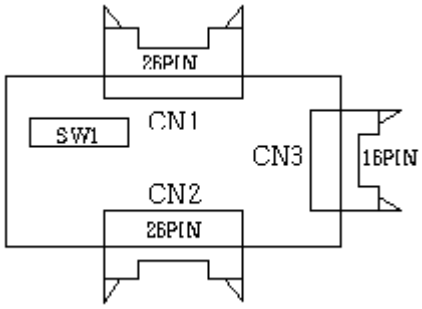


(Mounting 2 Cassettes)

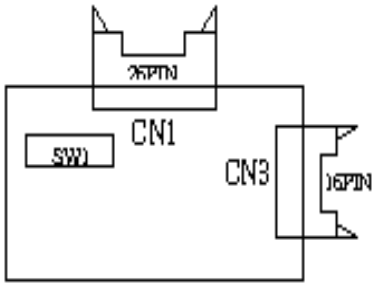


(Mounting 3 Cassettes)


© **Nautilus Hyosung, Inc.** All Rights Reserved.

# Cable Connection Diagram

► Main Board

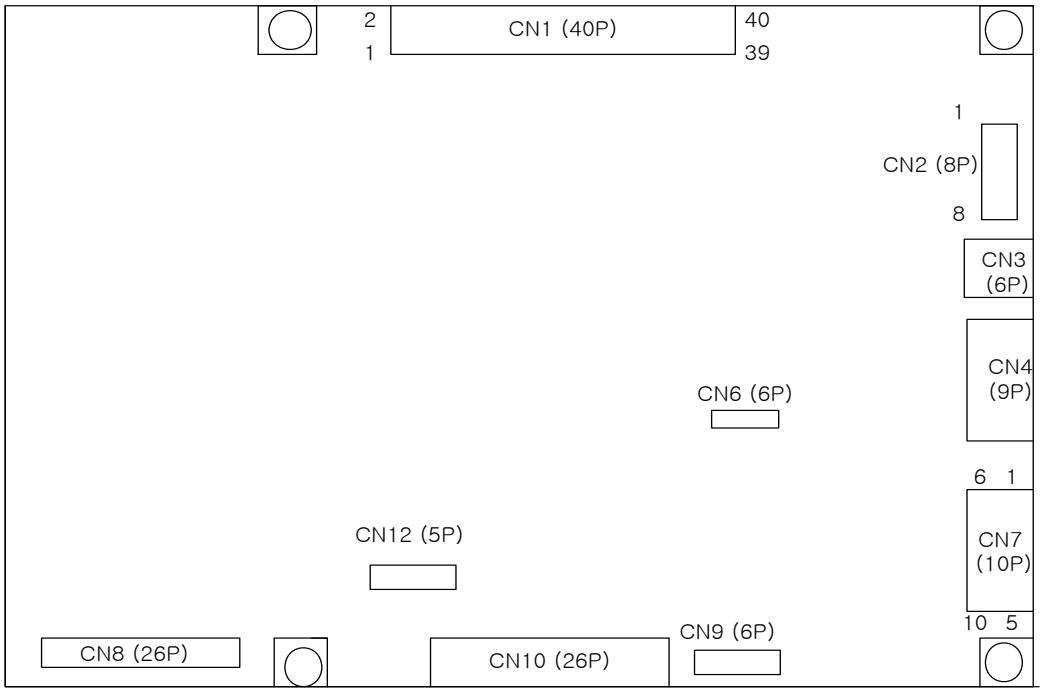


| Seq | Connector Name | No. of Pins | Use |
|---|---|---|---|
| 1 | CN1 | 40 | Sensor Unit |
| 2 | CN2 | 8 | Motor, Clutch, Solenoid |
| 3 | CN3 | 6 | Additional Sensor Unit |
| 4 | CN4 | 9 | RS-232C Comm. |
| 5 | CN6 | 6 | PLD Download |
| 6 | CN7 | 10 | POWER (VCC, +12V, +24V, GND) |
| 7 | CN8 | 26 | DIP S/W signal |
| 8 | CN9 | 6 | DC/DC Power Unit |
| 9 | CN10 | 26 | FM B/D Connection Unit |
| 10 | CN12 | 5 | 2 Sheet I/F |


© **Nautilus Hyosung, Inc.** All Rights Reserved.

# Chapter 7
# Receipt Printer

## Contents

Overview ..... 7-1
Preventive Maintenance ..... 7-2
- Cleaning ..... 7-3
- Lubrication ..... 7-4

Part Replacement ..... 7-8


© **Nautilus Hyosung, Inc.** All Rights Reserved.

# Overview

## General Precautions

► General Precautions

1. This manual is written on the premise that an expert performs maintenance, who knows the principle of operation, disassembling/assembling method and the standard of lubricant very well.
2. When performing the regular inspection or regular replacement, be sure to understand the order well and perform what you can do in a short time.
3. Be sure to find the broken area exactly and perform disassembling minimally during repairing. If the faults occur at several places or it may effect on the other places, you should understand the operation principle of the machine, decide the order of repair in advance and perform skillfully.
4. If removing the screws during adjustment, be sure to check the appointed fastening torque once again before terminating the adjustment.
5. Perform the lubrication according to the standard and avoid lubricating undesignated place or lubricating excessively. Be sure to mop the oil flowed by the over-lubrication.
6. If the lubricating oil is enough or there isn't discoloration by the dust, reduce the lubrication.
7. The item is included in the lubrication standard even if it isn't included in the items of the regular inspection and you judge that the lubrication is necessary, lubricate it.
8. If the lubrication or adjustment is necessary during ECO, perform them.
9. Be careful not to stain the sensor, micro switch, PCB connector and so on with the oil.
10. Be careful for the assembling location not to touch the moving part when installing machine or replacing. (Refer to the assembly diagram and adjustment standard.)
11. Do not operation or function test under the strong light to avoid the malfunction of sensor or abnormal operation of machine.


© **Nautilus Hyosung, Inc.** All Rights Reserved.

# Preventive Maintenance

## Regular Inspection & Cycle

► Symbol of Regular Inspection Cycle

| Symbol | Description |
|---|---|
| M6 | Once per six months |
| Y1 | Once a year (including the item of M6) |

► Regular Maintenance (Regular Replacement) Parts & Cycle

| Regular Maintenance (Regular Replacement) Parts | Part Number | Replacement Cycle | Remarks |
|---|---|---|---|
| TPH Ass'y (TPH included) | 5677000018 | Y5 | 70Km (43.5mile) |

**<Note!>**

1. Decide the maintenance & replacement cycle by adding the maintenance & replacement cycle of above table to the production date marked on the label.
2. For the part without label, make it a rule to perform maintenance or replacement based on the maintenance & replacement cycle of above table.

## Regular Inspection Item & Cycle

► Regular Inspection Item & Cycle

| Regular Inspection Item | Cleaning | Checking | Adjustment | Lubrication | Inspection Cycle |
|---|---|---|---|---|---|
| Sensor Inspection, Cleaning | | O | O | | M6 |
| Transport Path Cleaning | O | O | | | M6 |
| Outlet Motor Gear Inspection & Lubrication | | O | | O | M6 |
| TPH & Platen Cleaning | O | O | | | M6 |


© **Nautilus Hyosung, Inc.** All Rights Reserved.

## Cleaning

► Cleaning Transport Path

1. Turn power off.
2. Clean the parts (Roller, Cutter and so on) on the transport path by moving fine brush for cleaning back and forth several times.
3. Be careful not to occur static electricity on the printing side of TPH and not to touch with hand.

► Cleaning TPH & Platen

1. Turn power off and open the Platen Open Lever (Green).
2. Clean the Heat Element and Platen using cotton with ethanol, methanol and IPA.
3. After the alcohol ingredient completely goes away, place the Platen to its position.

► Precaution

1. Precaution during moving receipt printer
   - Move the receipt printer supporting it from below with both hands.
   - Do not hold the outlet of the printer during moving.
2. Posture during maintenance
   - If the receipt printer needs to be disassembled, be sure to put it on the flat surface without the salience after disassembling. Also, there aren't swing or interference of other object.
   - Do not lean or overturn the receipt printer.


© **Nautilus Hyosung, Inc.** All Rights Reserved.

# Lubrication

## General Oiling Criteria

► General Oiling Criteria

Lubricate the parts indicated on the drawing. Use the lubricant type and amount according to the oiling criteria.

► Oil amount symbol

1. OF: Dip the writing brush type 2 in the oil and squeeze it so that no oil drips from the brush. Then, lubricate the object surface with as little oil as possible.
2. O: Dip the writing brush type 2 and apply it all over the target thinly.
3. O1: Lubricate with one drop of oil (Oil amount: 15mg)
4. G: Apply the grease thinly using under the writing brush type #10. (Remove unnecessary oil lump)

**<Note!>**

a. Oil amount of 15mg corresponds to the amount that is applied in a drop with an oil feeder attached with a tube with 0.8~1.2mm diameter and 30mm.

b. 0.1g of Grease corresponds to the amount that is squeezed 1.2mm with the grease gun having the 7mm feeder entry.

► Type of lubricants

1. Grease(G1): Shell Albania Grease EP1
2. Tellus: Shell Tellus #100


© **Nautilus Hyosung, Inc.** All Rights Reserved.

## Oiling Criteria

► Initial Lubricant: Initial Lubricant Only
6M: Once every six months
1Y: Once a year

1. Oiling rules
- Check the lubrication before starting or storing printers or MSCRW. If any part is insufficiently lubricated, lubricate it according to the oiling criteria.
- Lubricate the part only when it is necessary during field regular inspection. If lubrication is sufficient, no additional oiling is required. If the oil is dirty, remove it and lubricate again.
- Make sure to lubricate all pivot points and friction parts.
-Lubricating parts: All equipment operation parts excluding printing head, package, micro switch contact point, drive roller, timing pulley and timing belt.
-As a general rule, apply oil by dropping the oil onto the part. If the edge of oil feeder has to touch the surface of the object, do not have the oil feeder touch the part for more than a second.

2. Warnings
-Do not apply oil if it oozes out from the designated place. Do not over-lubricate since it can contaminate other parts, or flow into other parts or splash.
-Be sure that lubricant does not contaminate micro switch, sensor, timing pulley, timing belt, package, printing head.
-Do not scrub the plastic parts or protection parts with alcoholic substance or other solvent.
-Use a piece of soft and dry cloth when removing dust, oil or grease, or cleaning the part or the assembly parts.
-Be careful that the paper contact side in the paper return path is not wet with oil.


© **Nautilus Hyosung, Inc.** All Rights Reserved.

## Oiling Criteria for each module

► Spring Hook

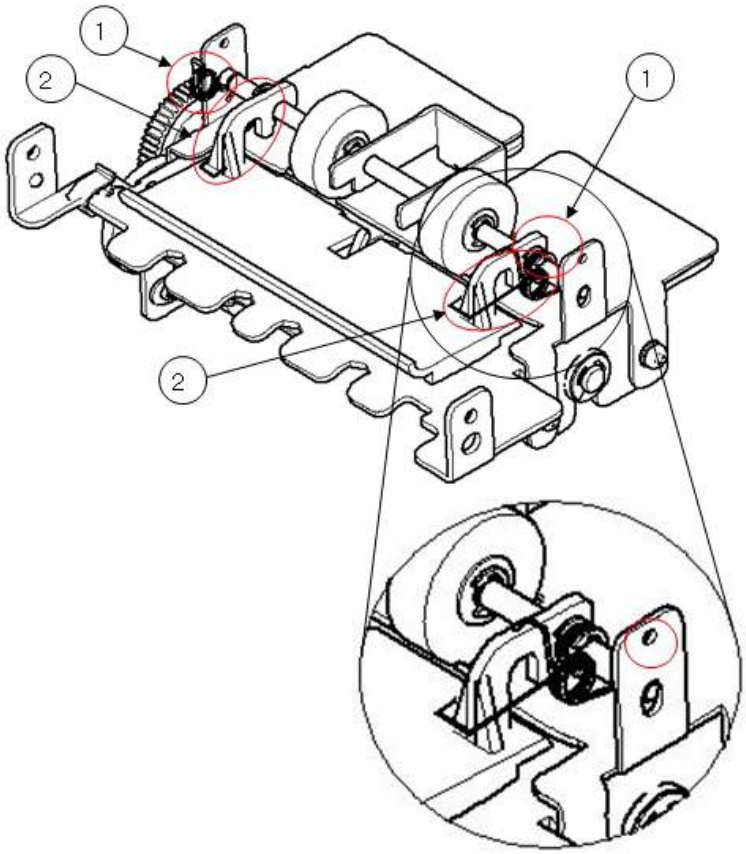



© **Nautilus Hyosung, Inc.** All Rights Reserved.

►Gear

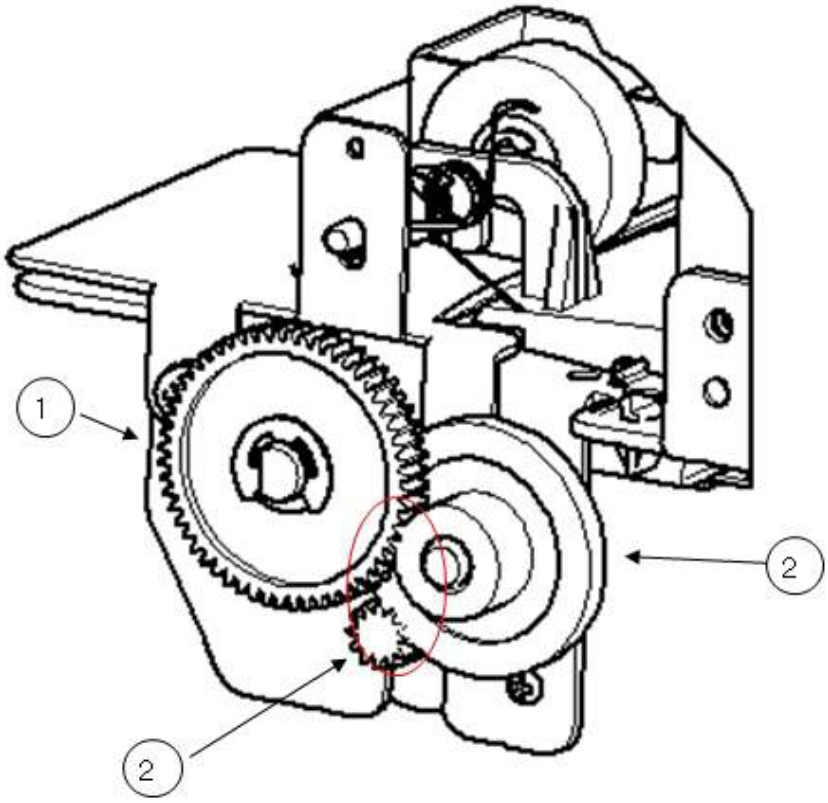



© **Nautilus Hyosung, Inc.** All Rights Reserved.

# Part Replacement

## List of Replacement Part

► The table below shows the list of replacement part

| Replacement Part | Part Number | Remarks |
|---|---|---|
| AM_TPH82 | 5677000018 | |
| SENSOR:P-INTERRUPTER:SG-405CD:CM-SHU | 21685601 | 2 places |
| SPRING:SUPPORT_UPPER_GUIDE | 43252801 | 2 places |
| SPRING:ROLLER | 44949002 | 2 places |
| GUIDE:SPR_UPPER | 45424101 | |
| MOTOR:20P020S0-08002 | 5640000172 | |
| PCBA:K-SPR1VE_SERIAL | 7680000009 | |

## How to disassemble receipt printer to three sections

► To replace the part, disassemble the receipt printer to three sections as the picture below,

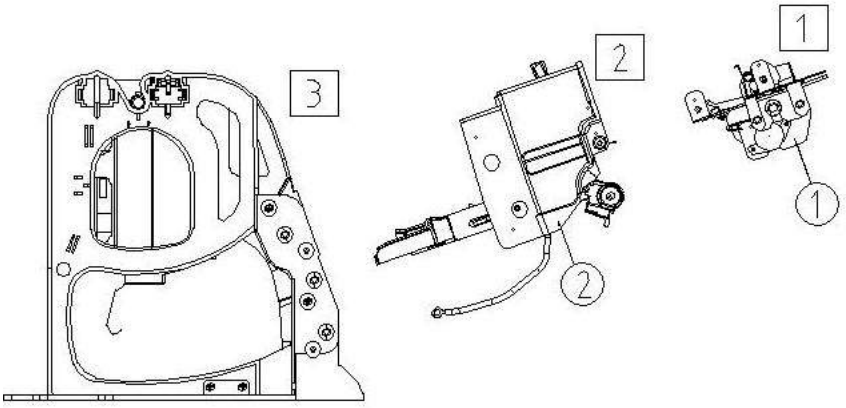


| | |
|---|---|
| ① | ASSY:OUTLET |
| ② | ASSY:TPH_SUPPORT |
| ③ | ASSY:MAIN_FRAME |


© **Nautilus Hyosung, Inc.** All Rights Reserved.

► How to disassemble,

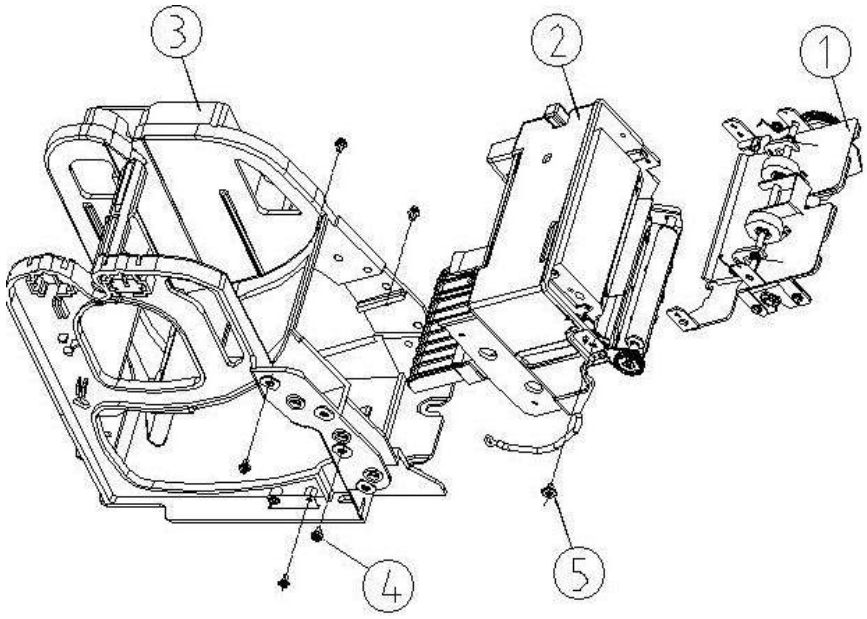


| | |
|---|---|
| ④ | SCR:PH_M3X10 x3ea |
| ⑤ | SCR:M3X6 (S) |

1. Remove the screw (④) and disassemble ASSY:TPH_SUPPORT (②) from ASSY:MAIN_FRAME (③)
2. Remove the screw (⑤). Then disassemble ASSY:OUTLET (①) and ASSY:TPH_SUPPORT (②)


© **Nautilus Hyosung, Inc.** All Rights Reserved.

## How to disassemble TPH

► Disassembling TPH

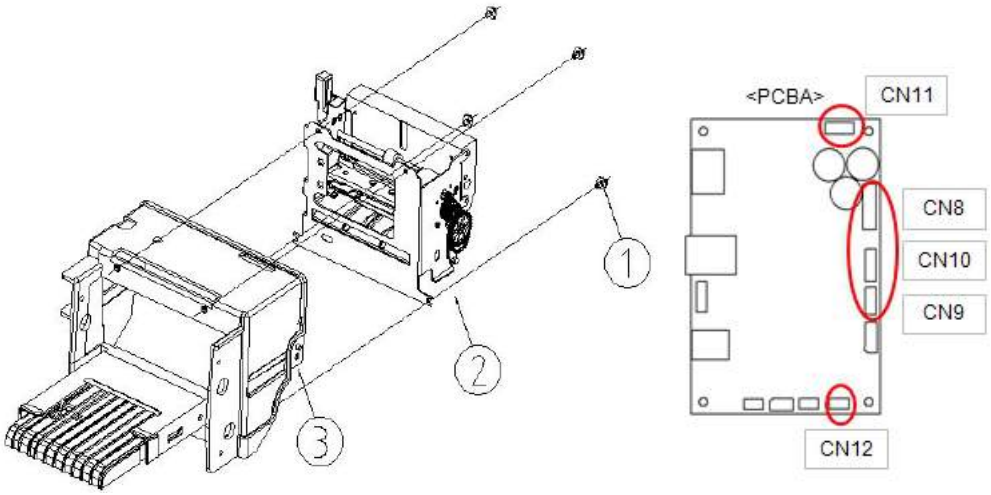


| | |
|---|---|
| ① | SCR:PH_M3x8 x4ea |
| ② | TPH:AM_ATP82_SPR(5677000018) |
| ③ | ASSY:TPH_OUTLET |

1. Remove the screws (①, SCR: PH_M3x8 x4ea) and disassemble TPH.

## How to disassemble Jam Sensor (MS3)

► Disassembling TPH

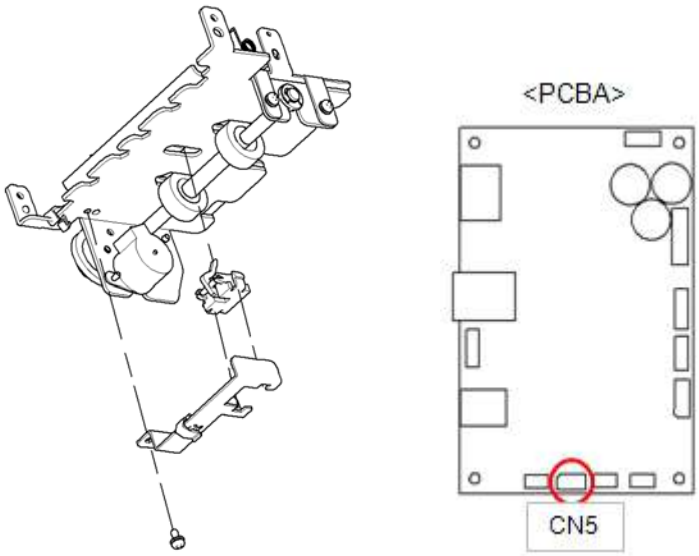



© **Nautilus Hyosung, Inc.** All Rights Reserved.

| | |
|---|---|
| ① | SENSOR:P-INTERRUPTER (21685601) |
| ② | BRACKET:JAM_SENSOR |
| ③ | SCR:PH_M3X6 |

1. Remove the screw (③) and disassemble BRACKET:JAM_SENSOR (②)

## How to disassemble END Detection Sensor (MS1)

► Disassembling END Detection Sensor (MS1)

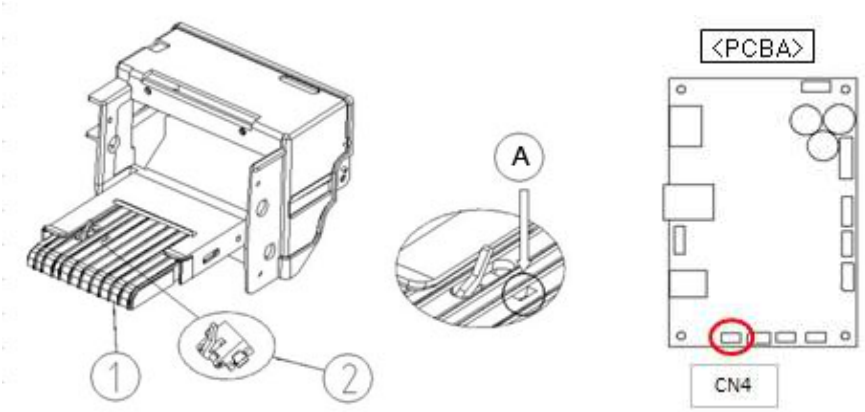


| | |
|---|---|
| ① | GUIDE_LOWER |
| ② | END_SENSOR:SPR26(3200002774) |

1. Disassemble the sensor using “-“ driver (Hole of A).
2. Disconnect the connector from PCBA of Main_Frame.


© **Nautilus Hyosung, Inc.** All Rights Reserved.

## How to disassemble Spring

► Disassembling Spring

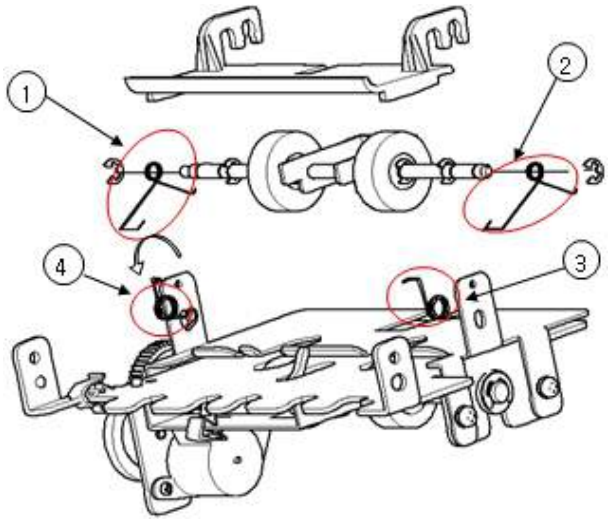


| | |
|---|---|
| ① | SPRING:ROLLER_LEFT(44949001) |
| ② | SPRING:ROLLER_RIGHT(44949002) |
| ③ | SPRING:SUPPORT_UPPER_GUIDE_RIGHT (43252801) |
| ④ | SPRING:SUPPORT_UPPER_GUIDE_LEFT (43252802) |

1. Disassemble the springs (4ea) from ASSY:OUTLET.
2. After replacing spring, be sure to lubricate.


© **Nautilus Hyosung, Inc.** All Rights Reserved.

## How to disassemble Guide

► Disassembling Guide

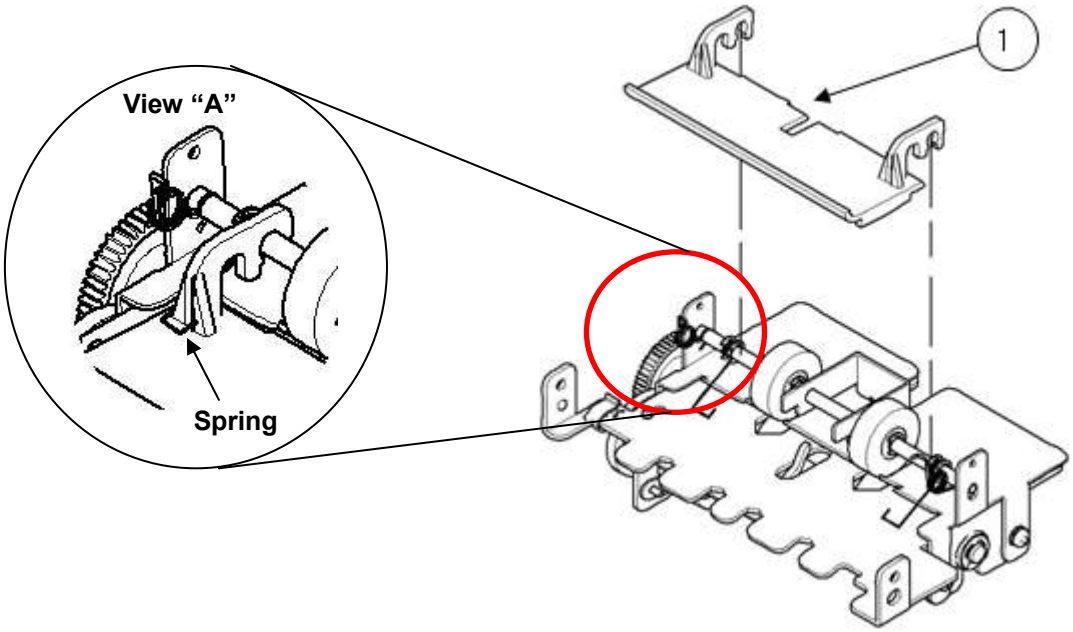


| | |
|---|---|
| ① | GUIDE:SPR_UPPER(45424101 ) |

1. Lift up the spring and disassemble the guide. (Refer to View “A”)


© **Nautilus Hyosung, Inc.** All Rights Reserved.

## How to disassemble Motor

► Disassembling Motor

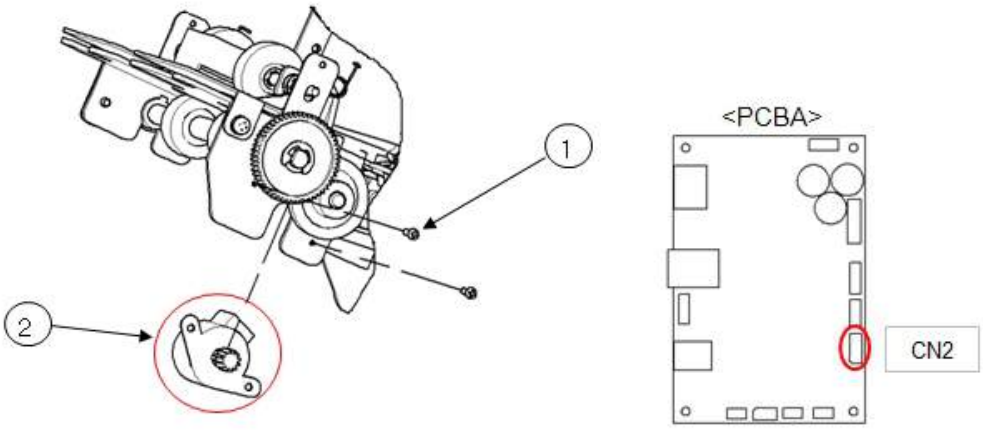


| | |
|---|---|
| ① | SCR:PH_M2X6 x2ea |
| ② | STEP_MOTOR:20P020S0-08002 (5640000172) |

1. Remove the screws (2ea, ①) and disassemble the motor (②).


© **Nautilus Hyosung, Inc.** All Rights Reserved.

## How to disassemble PCBA

► Disassembling PCBA

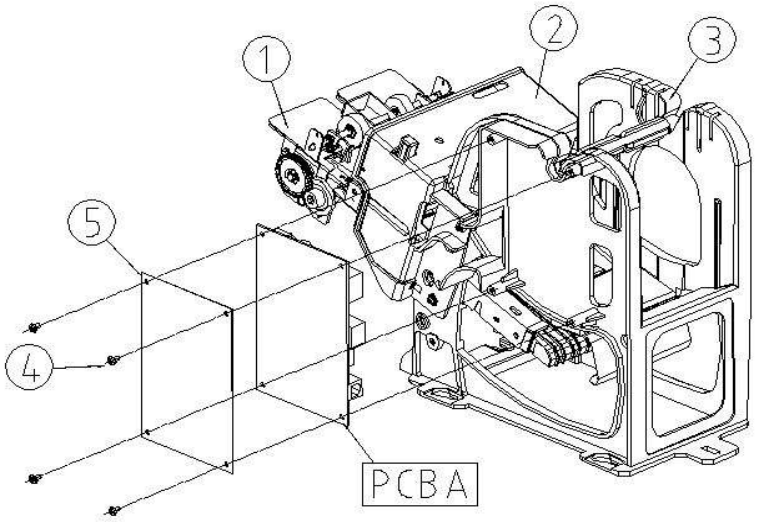


| | |
|---|---|
| ①② | ASSY:OUTLET, TPH |
| ③ | ASSY:MAIN_FRAME |
| ④ | SCR:M3X6 TAP x 4ea |
| ⑤ | COVER:PCBA |

1. Unfasten the screw (④) and disassemble PCBA (⑤) from ASSY:MAIN_FRAME (③)


© **Nautilus Hyosung, Inc.** All Rights Reserved.

# Index


© **Nautilus Hyosung, Inc.** All Rights Reserved.

# Memo


© **Nautilus Hyosung, Inc.** All Rights Reserved.